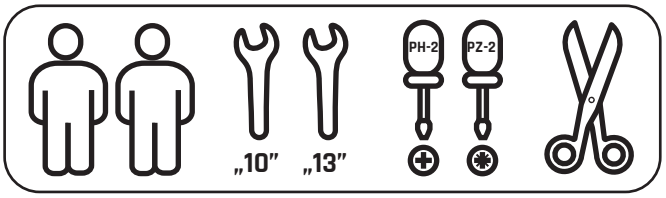
„10"
„13"
PH-2
PZ-2

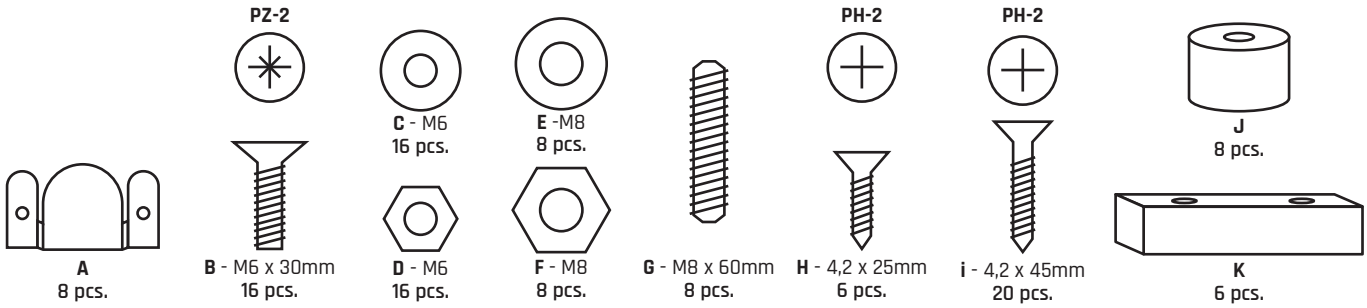
PZ-2
PH-2
PH-2
A
8 pcs.
B - M6 x 30mm
16 pcs.
C - M6
16 pcs.
D - M6
16 pcs.
E -M8
8 pcs.
F - M8
8 pcs.
G - M8 x 60mm
8 pcs.
H - 4,2 x 25mm
6 pcs.
i - 4,2 x 45mm
20 pcs.
J
8 pcs.
K
6 pcs.

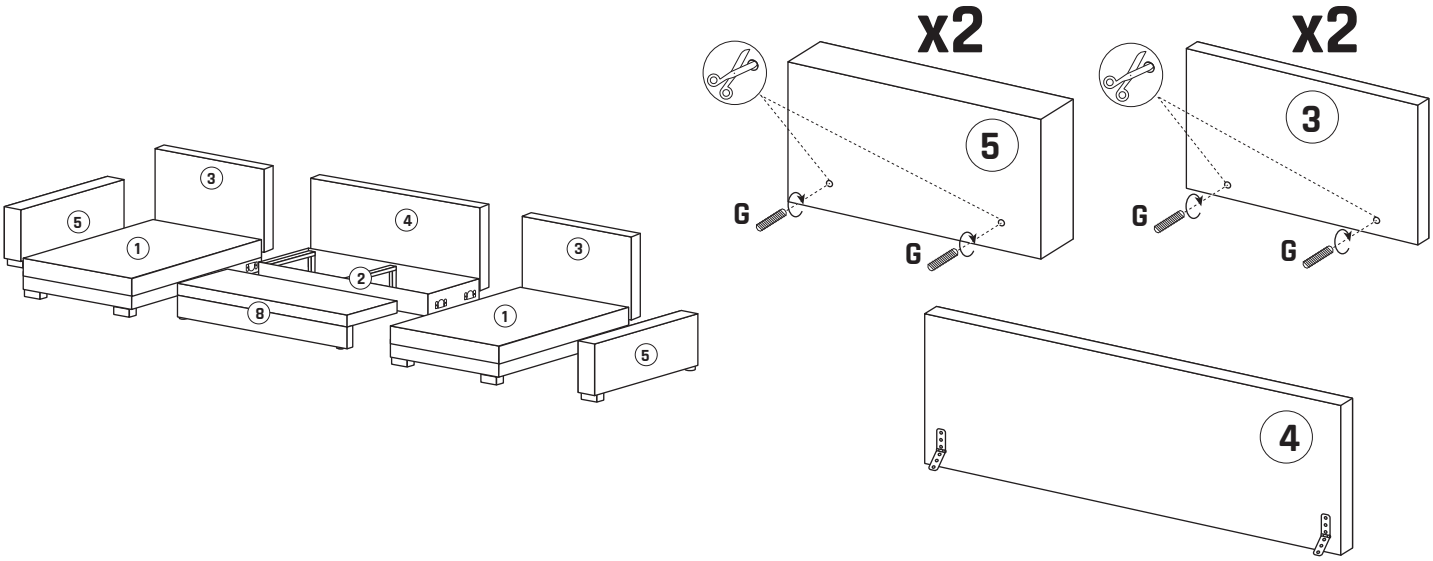
x2
x2
5
3
4
G
G
G
G
1
2
8

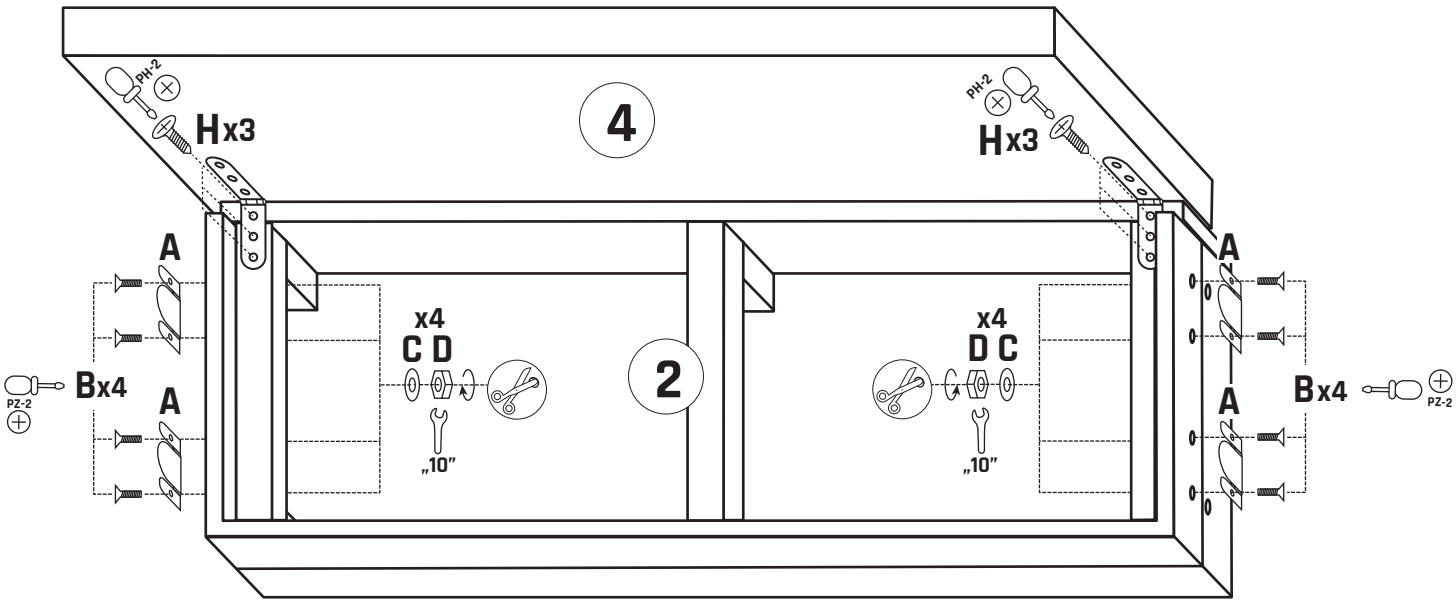
PH-2
Hx3
4
PH-2
Hx3
A
A
x4
C D
„10"
2
x4
D C
„10"
A
A
Bx4
PZ-2
Bx4
PZ-2

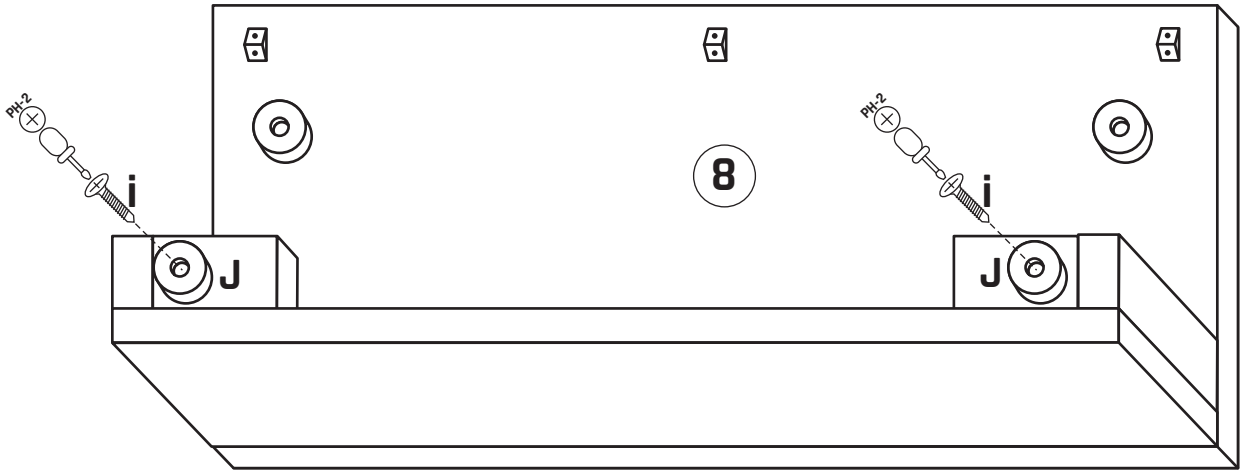
PH-2
i
J
8
PH-2
i
J

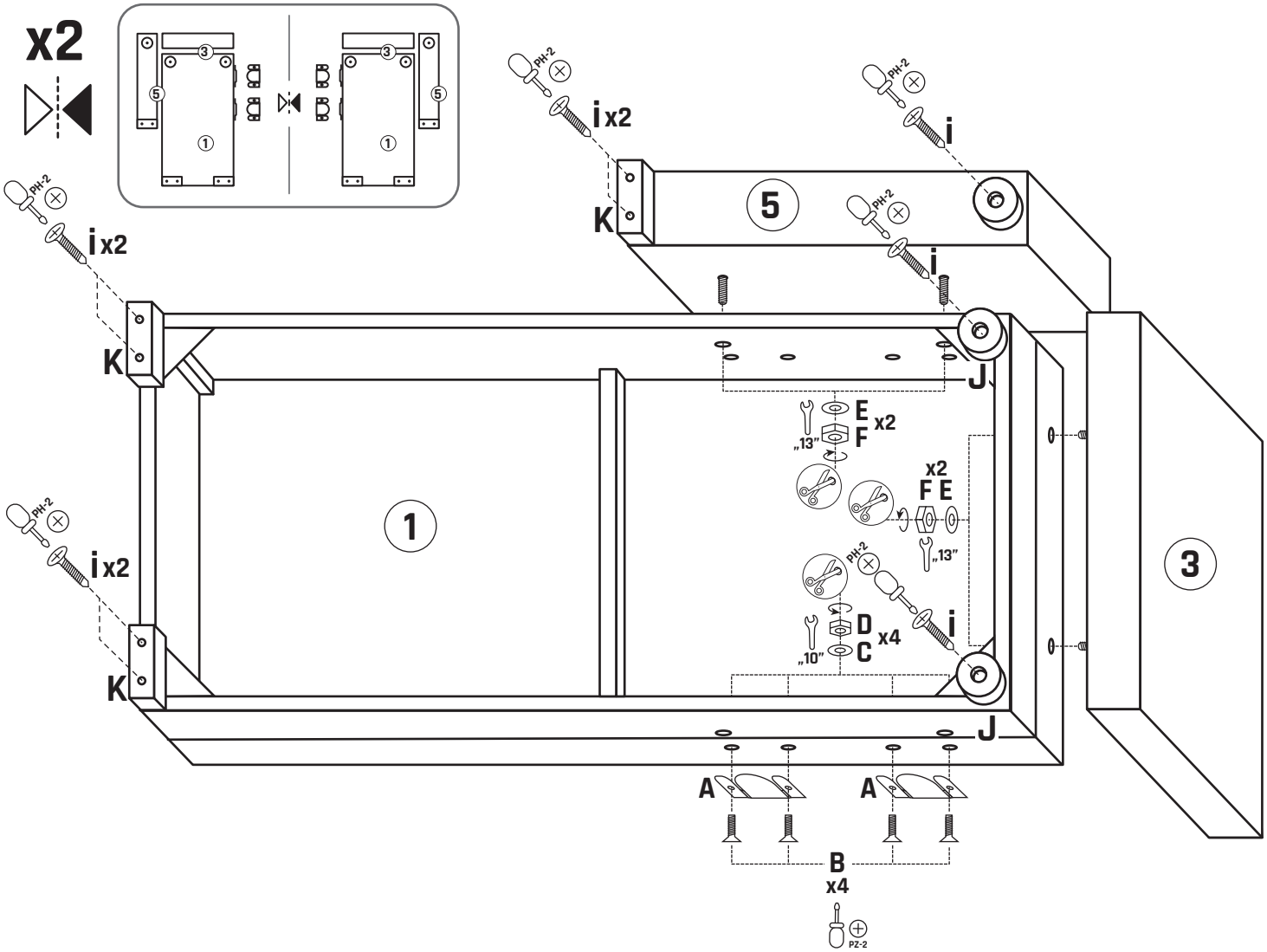
x2
3
5
1
3
5
1
PH-2
i x2
K
PH-2
i x2
K
PH-2
i x2
K
PH-2
i x2
K
5
PH-2
i
PH-2
i
J
J
E
F
x2
„13"
x2
F E
„13"
1
3
PH-2
i
D
C
x4
„10"
A
A
B
x4
PZ-2

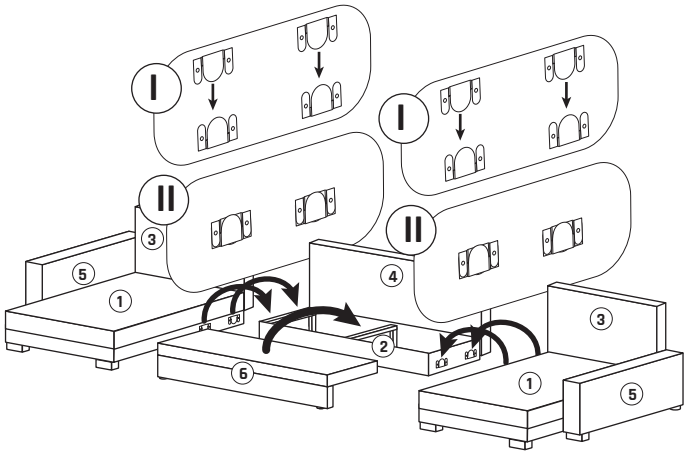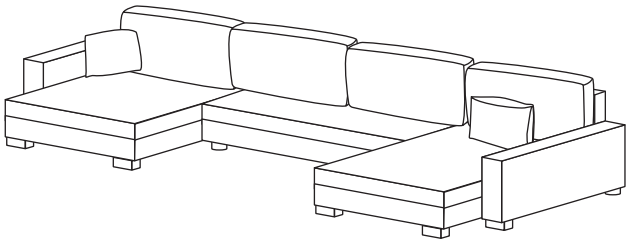
I
I
II
II
3
5
1
4
2
6
3
1
5