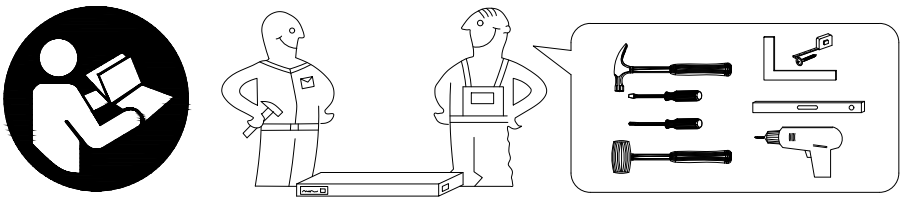

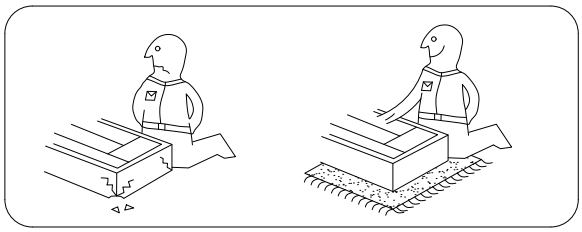

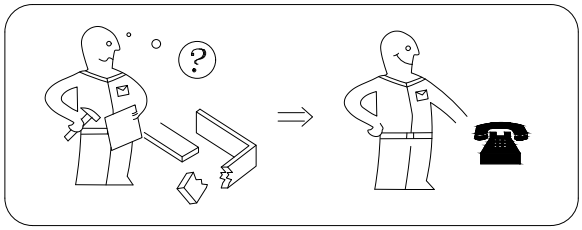
?

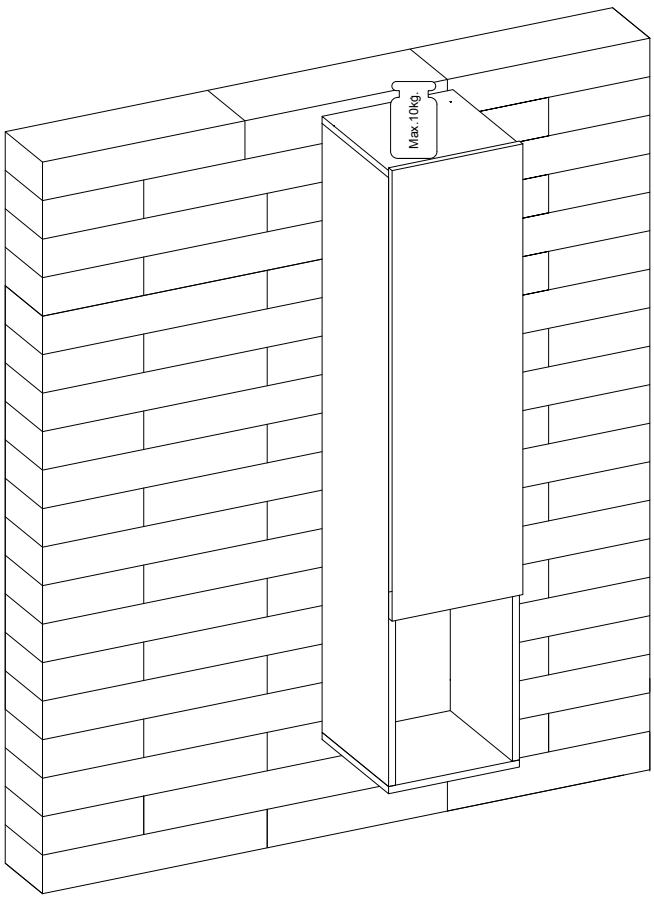
Max.10kg.

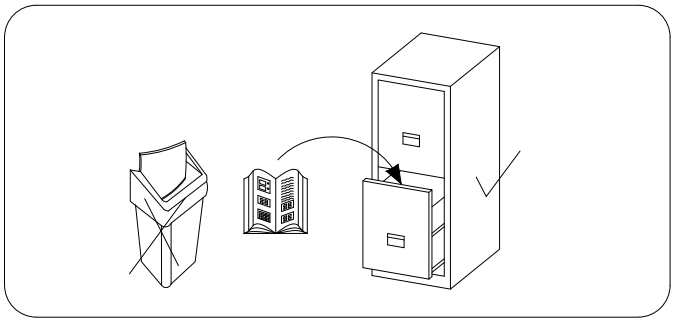

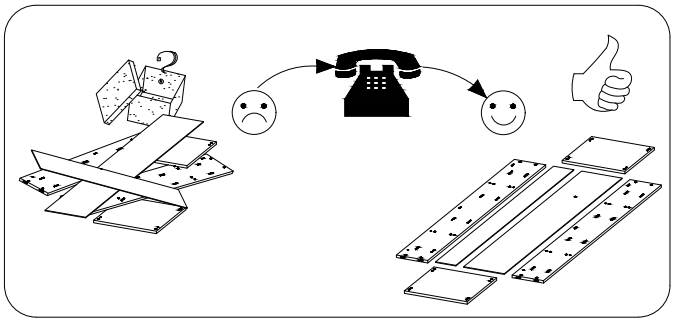

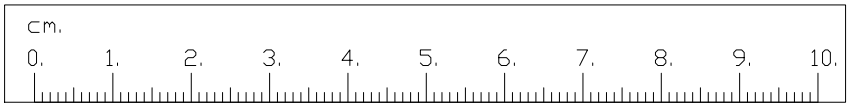
cm.
0.
1.
2.
3.
4.
5.
6.
7.
8.
9.
10.

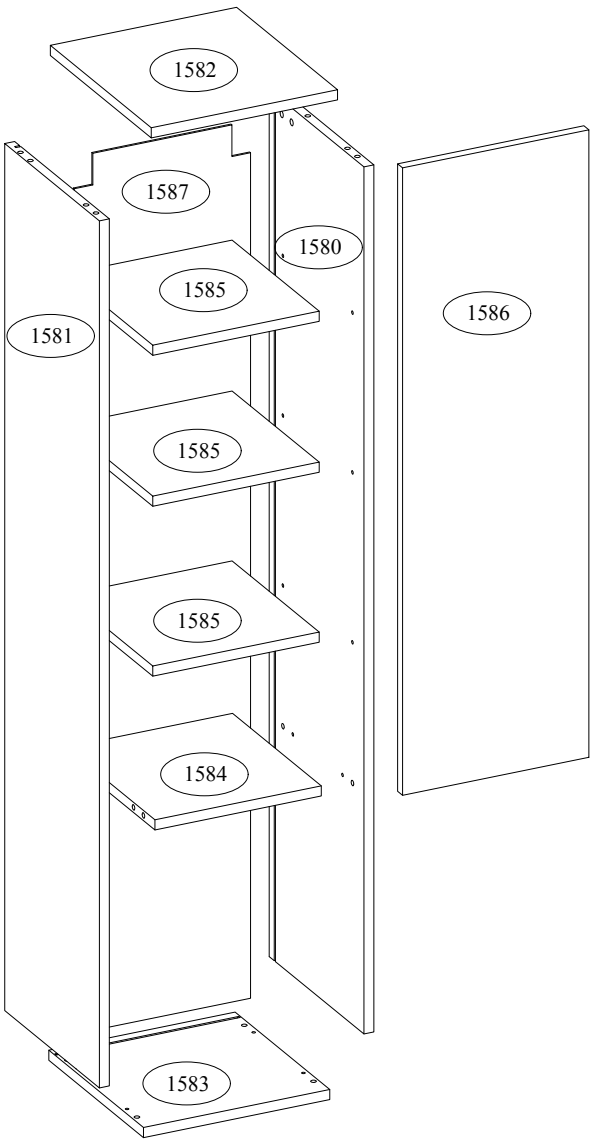
1582
1587
1580
1585
1581
1586
1585
1585
1584
1583

I

G	4.0x30 H1	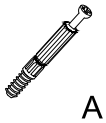 A	S	8.0x30 D	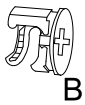 B
2	4	4	12	8	8

II - III

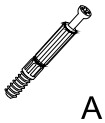 A	8.0x30 D	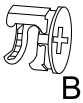 B
8	4	4

IV - XII

∅-10.0 KR	6.3X13 F	I	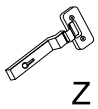 Z	X	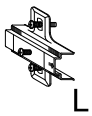 L
2	4	8	2	12	2

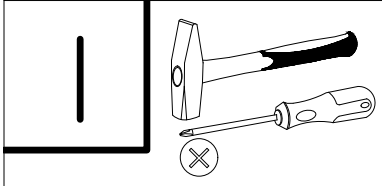

G	4.0x30 H1	A	S	8.0x30 D	B
2	4	4	12	8	8

1x

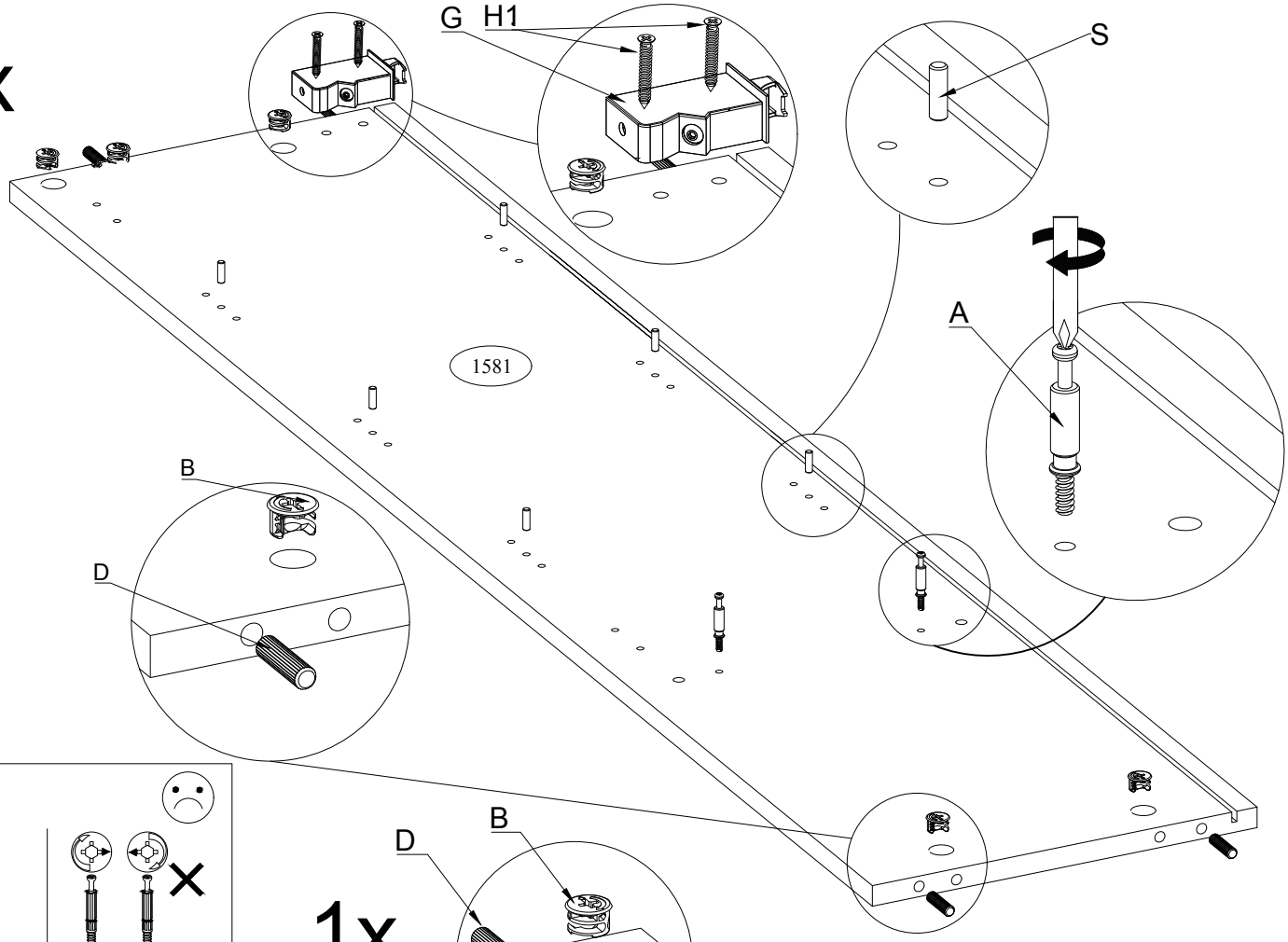

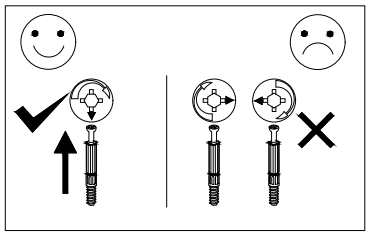

1x

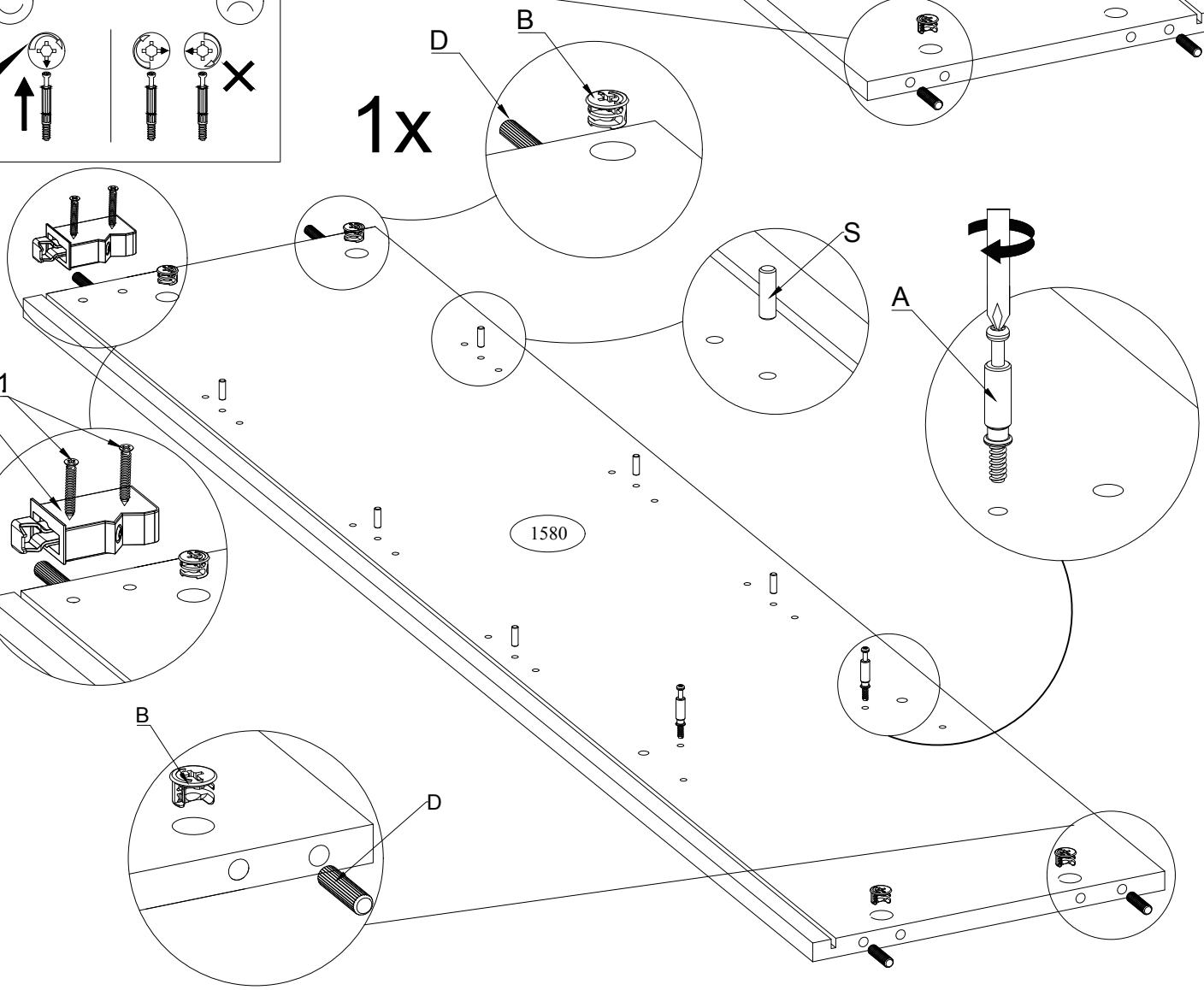

II

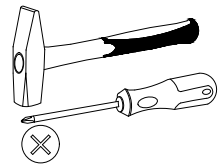

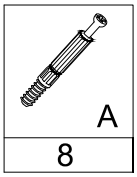

8

1x

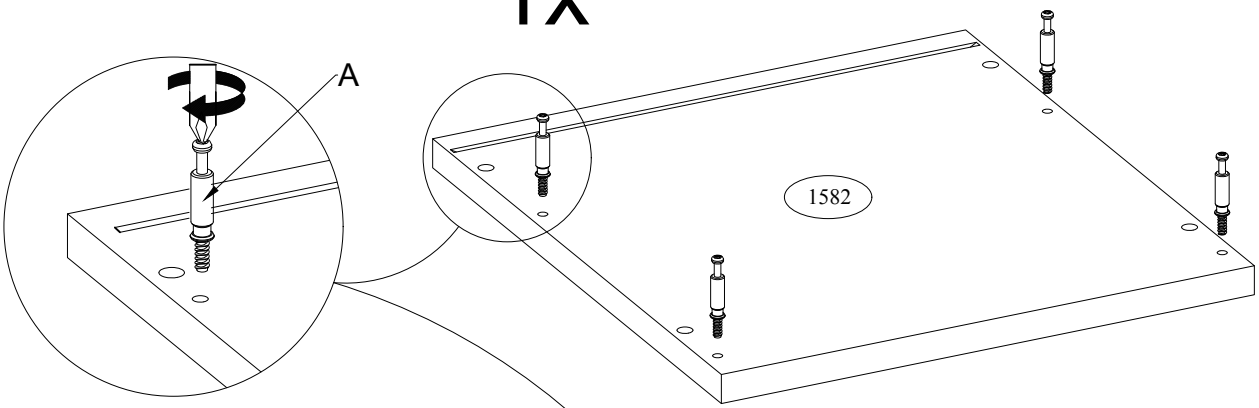

1x

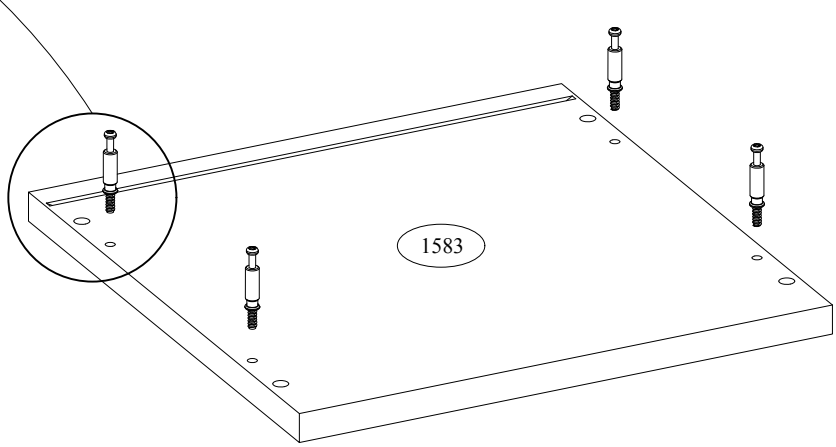

III

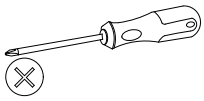

8.0x30 D	B
4	4

1x

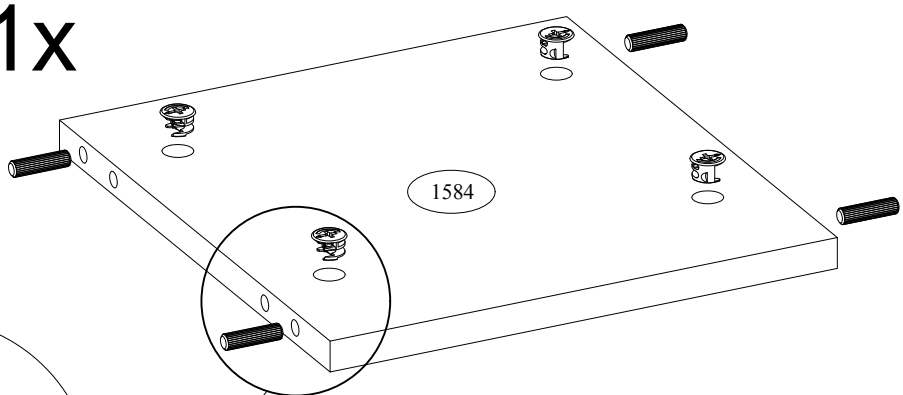

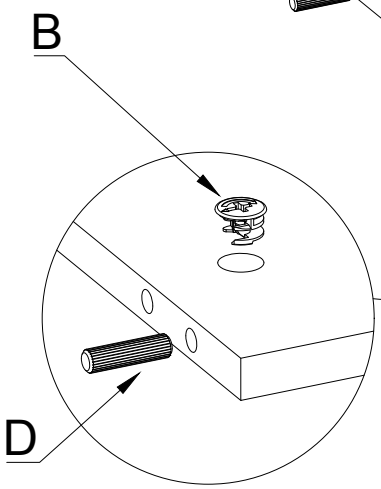

IV

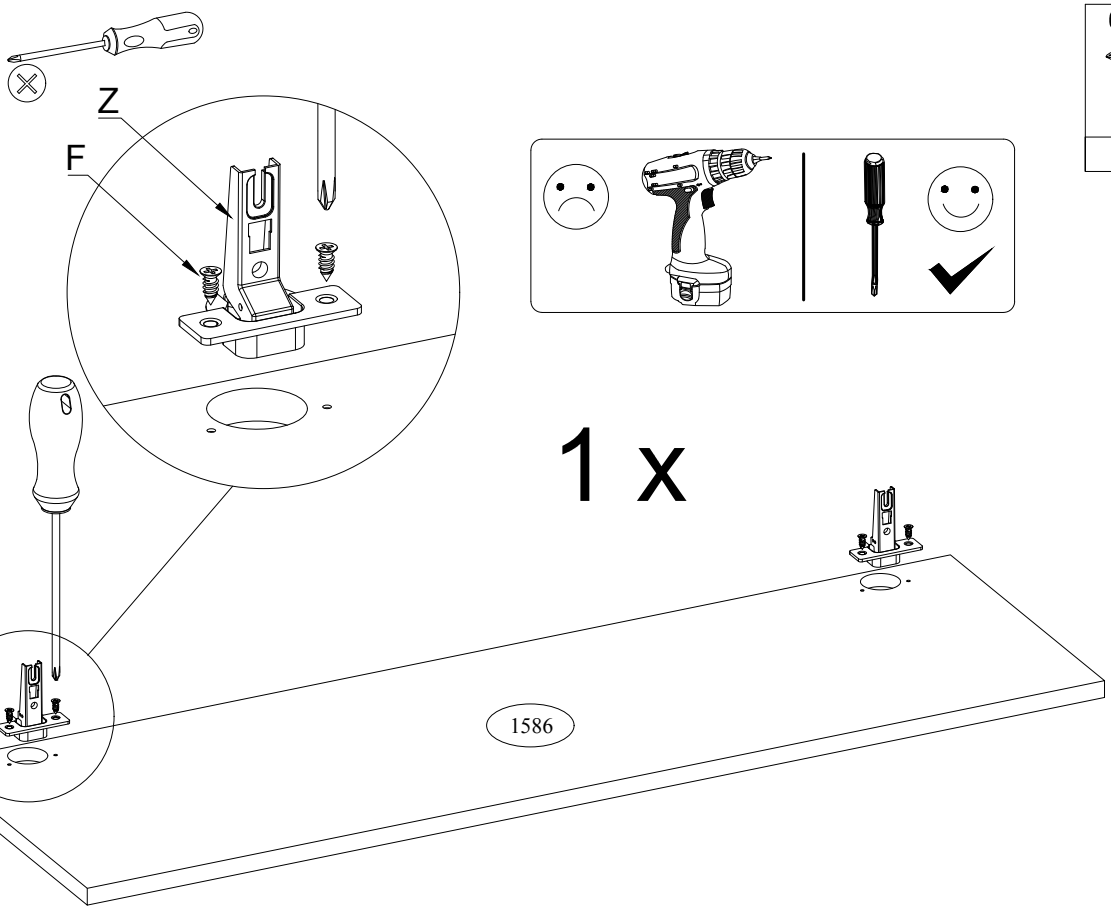

6.3X13 F	Z
4	2

V

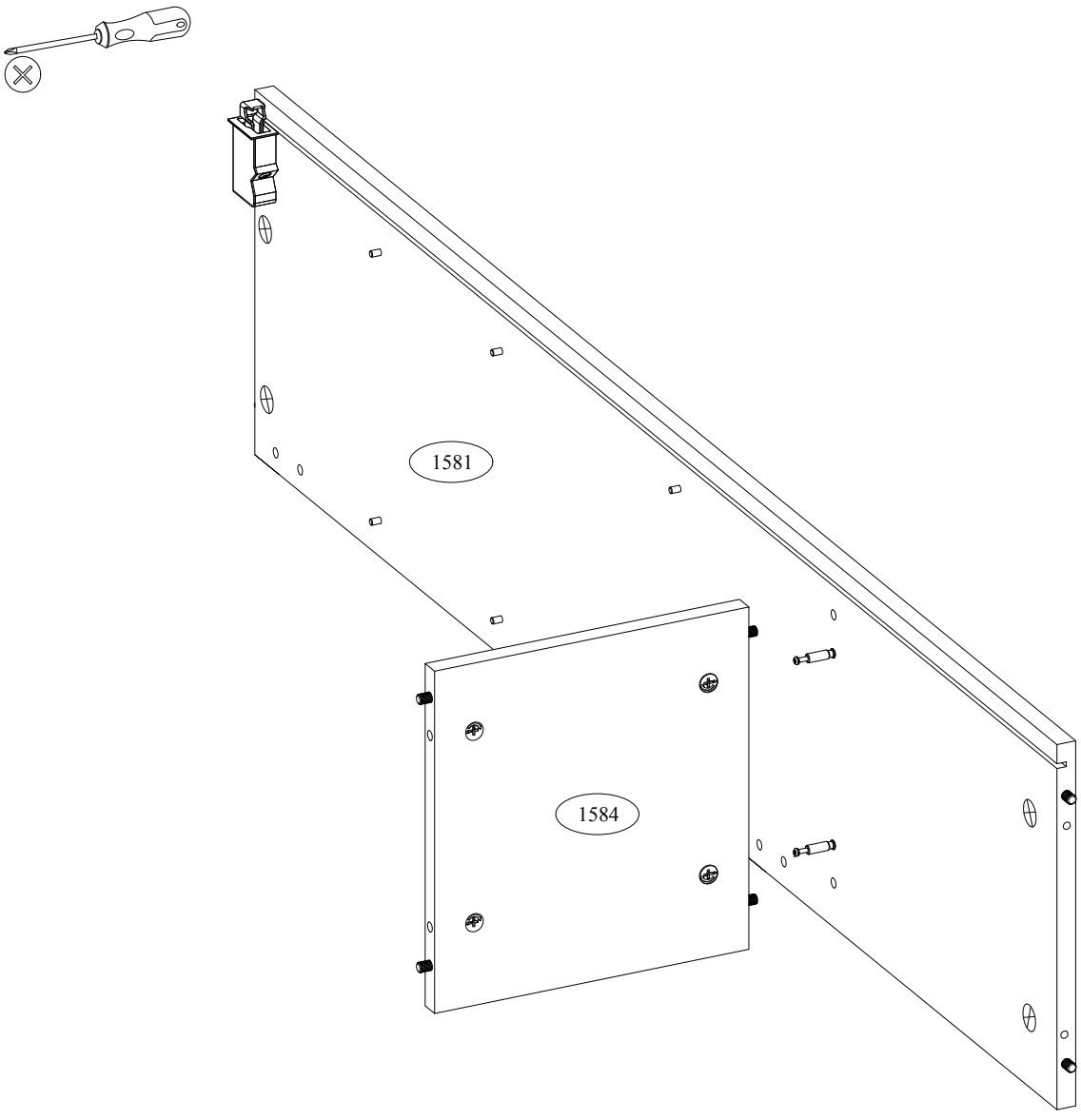

VI

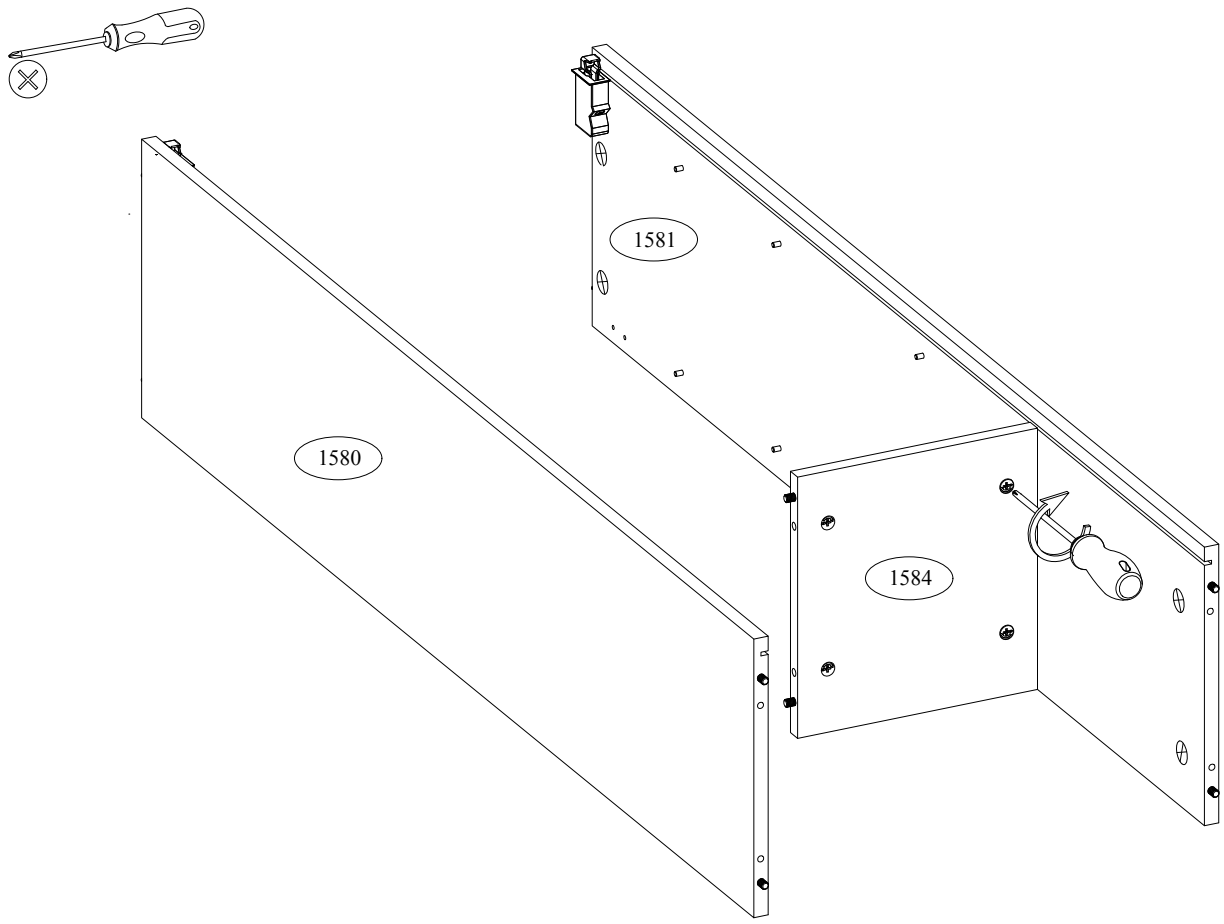

VII

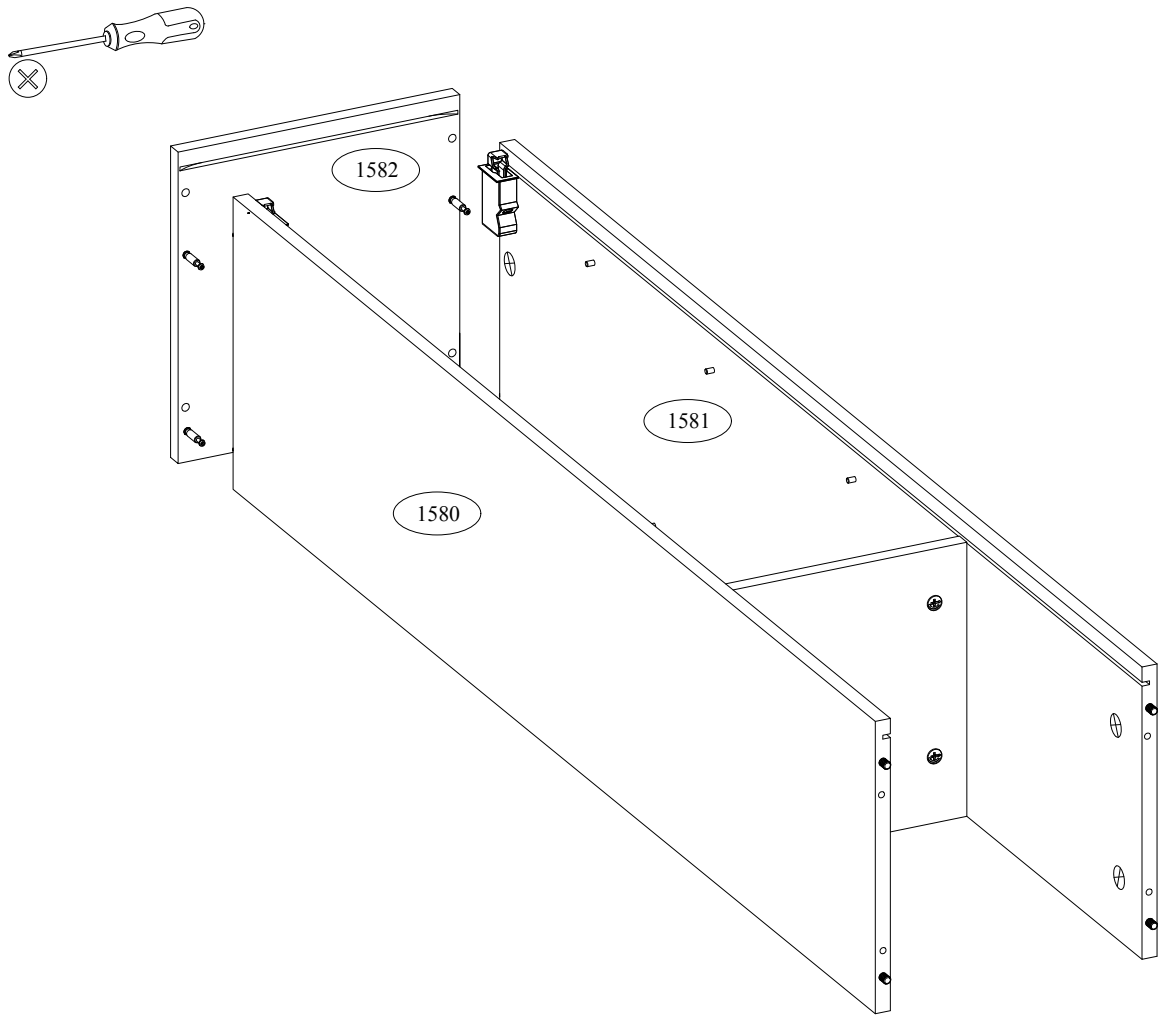

VIII

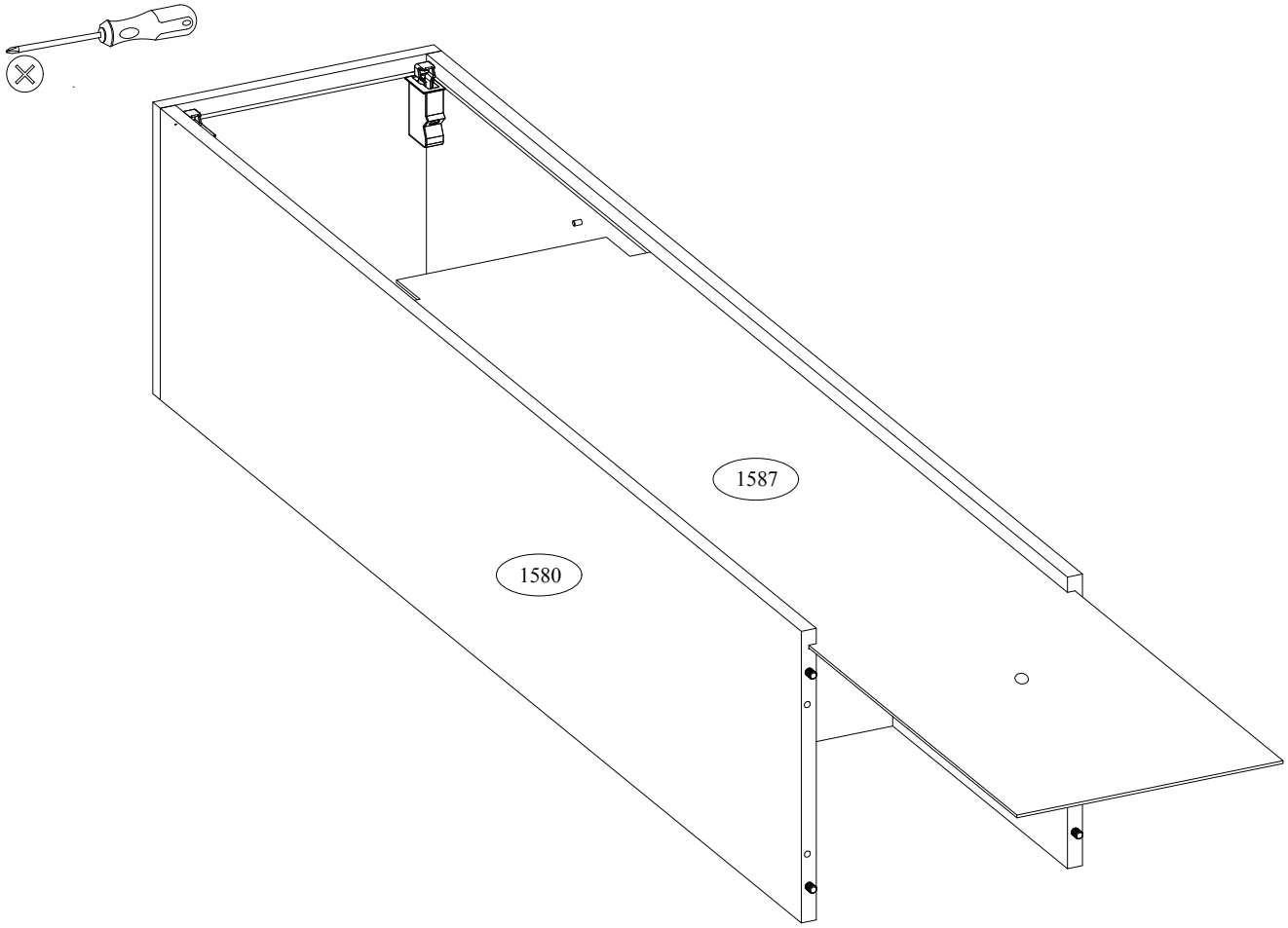

IX

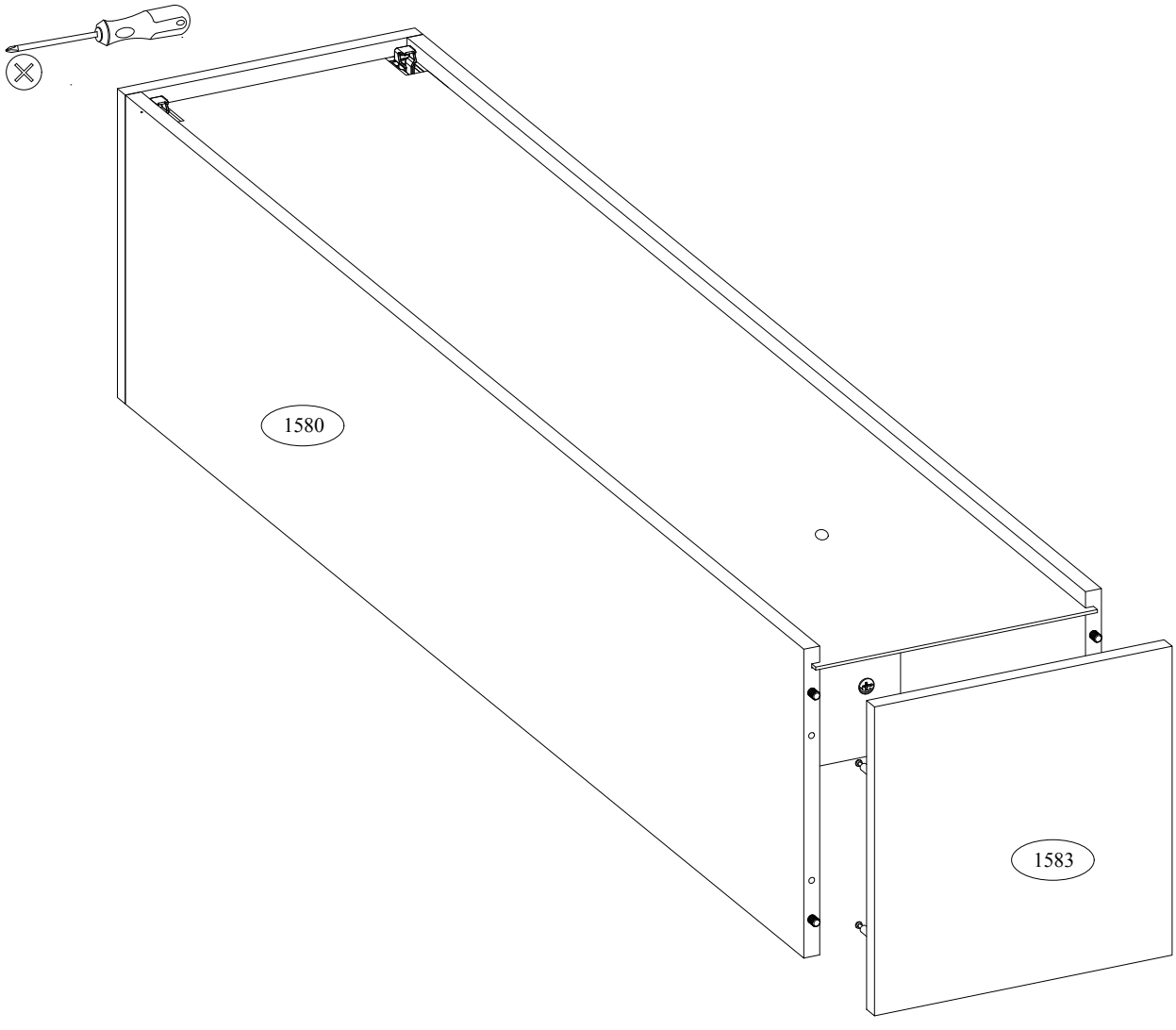

X

I

8

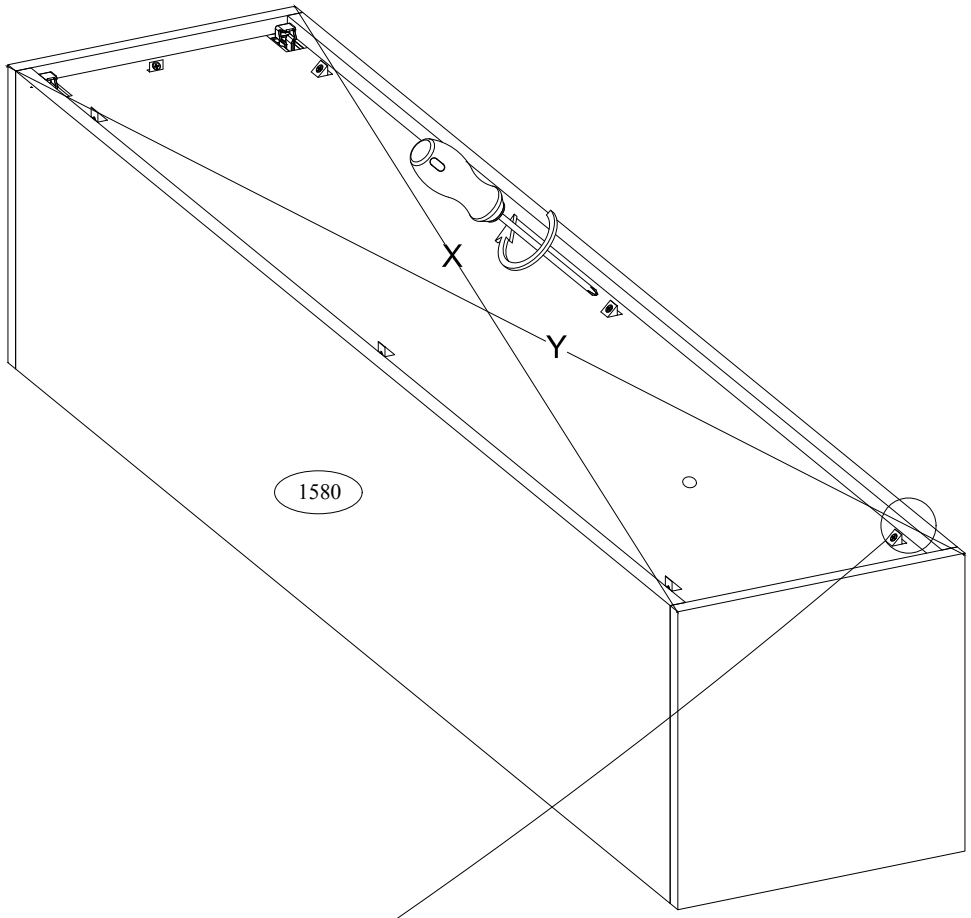

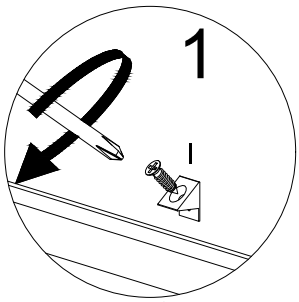

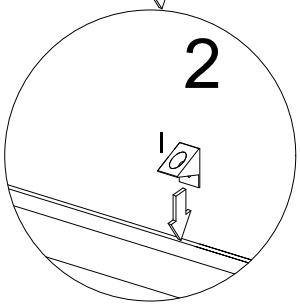

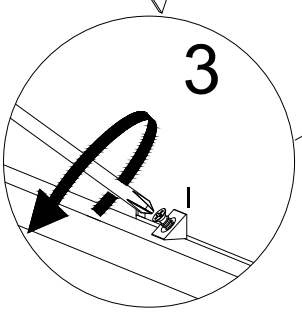

X=Y

XI

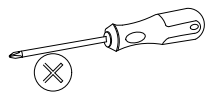

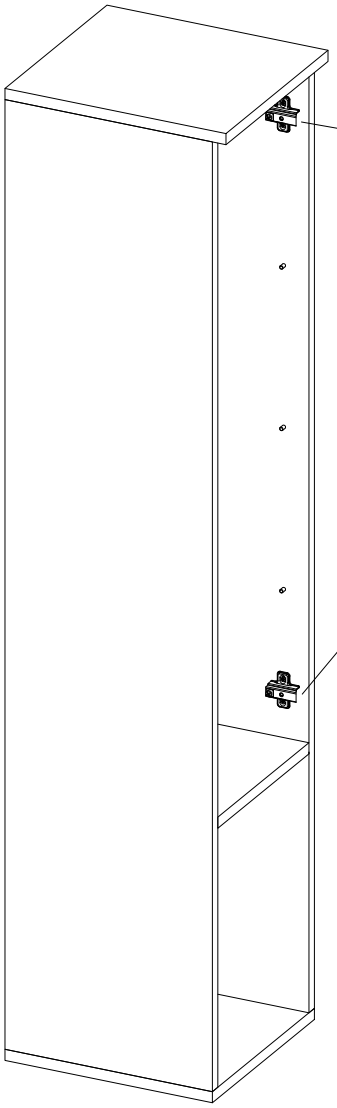

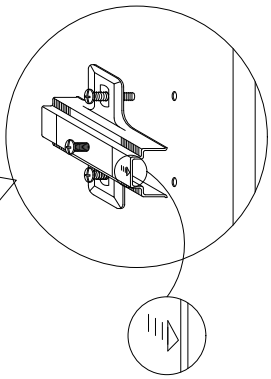

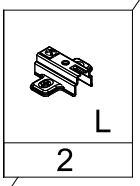

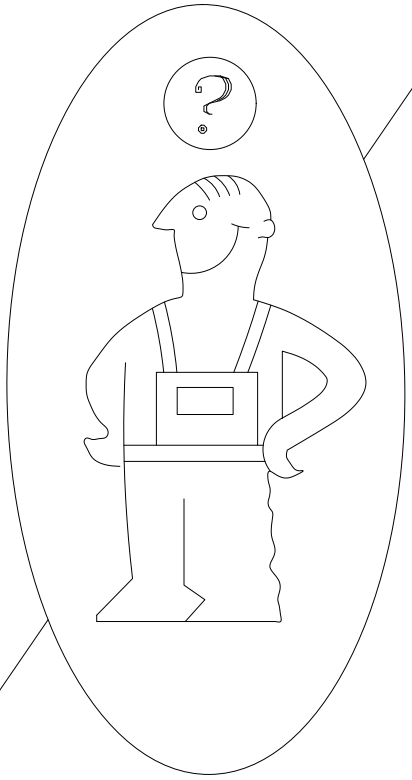

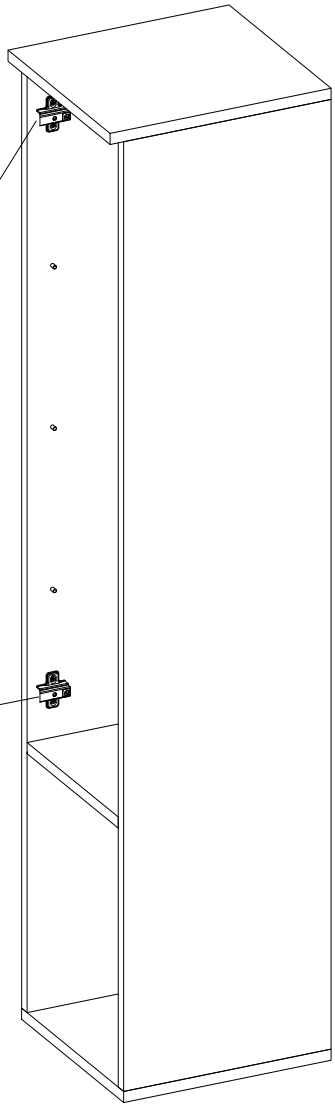

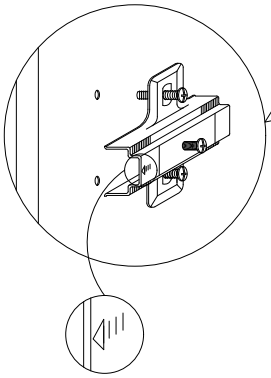

XII

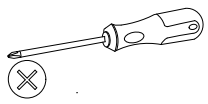

R

Ø-10.0 KR	X
2	12

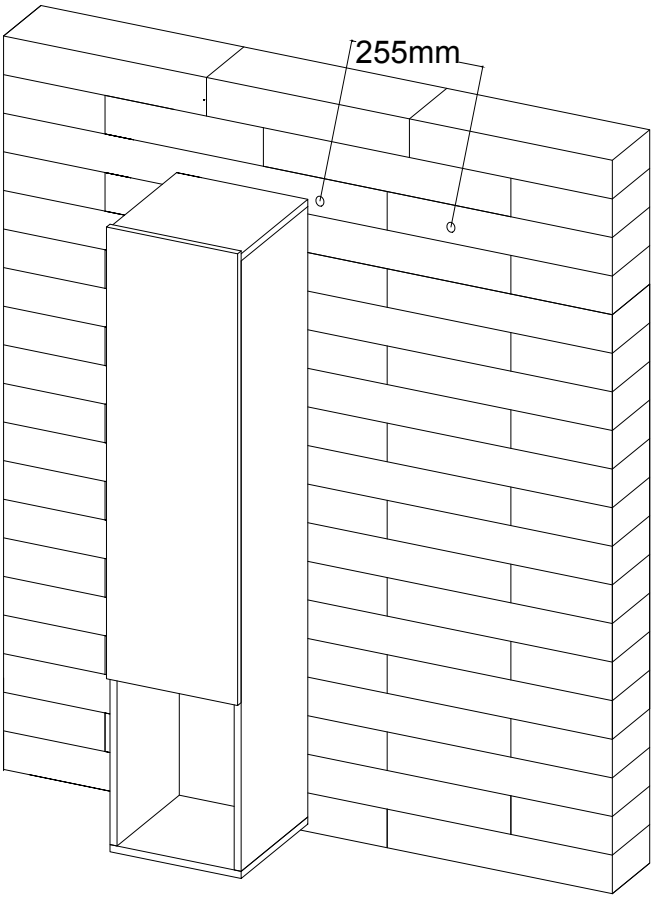

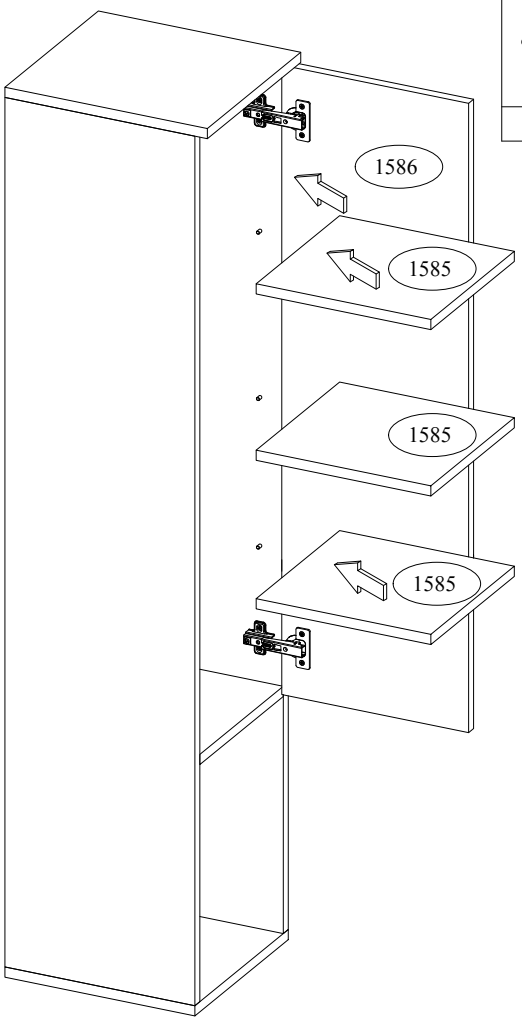

L

Ø-10.0 KR	X
2	12

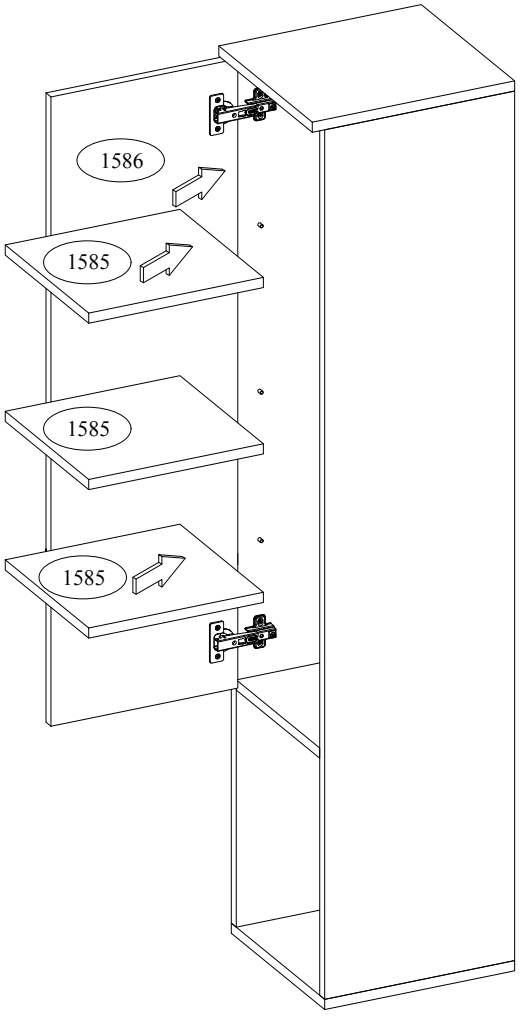

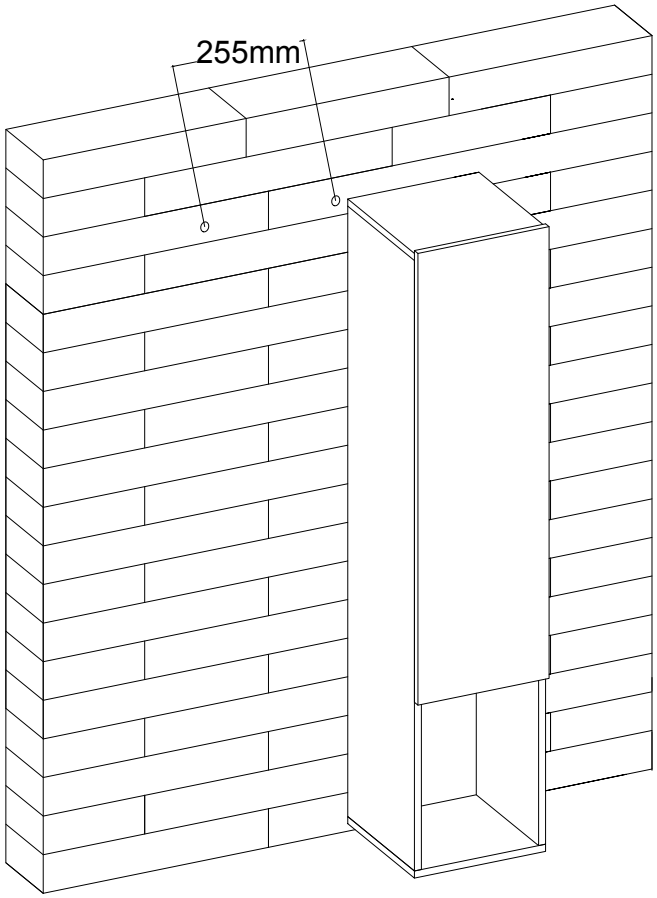

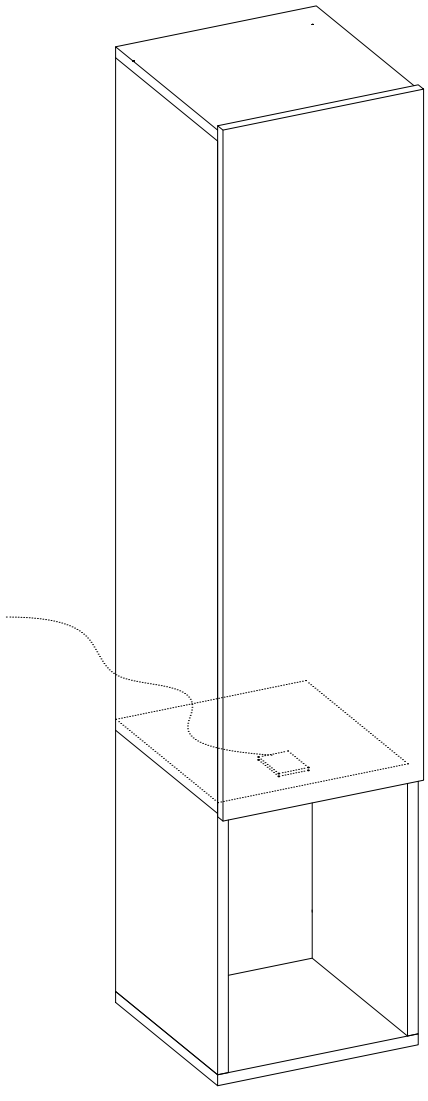

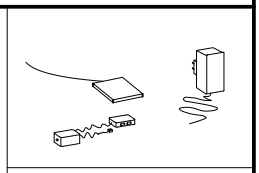

1

XII

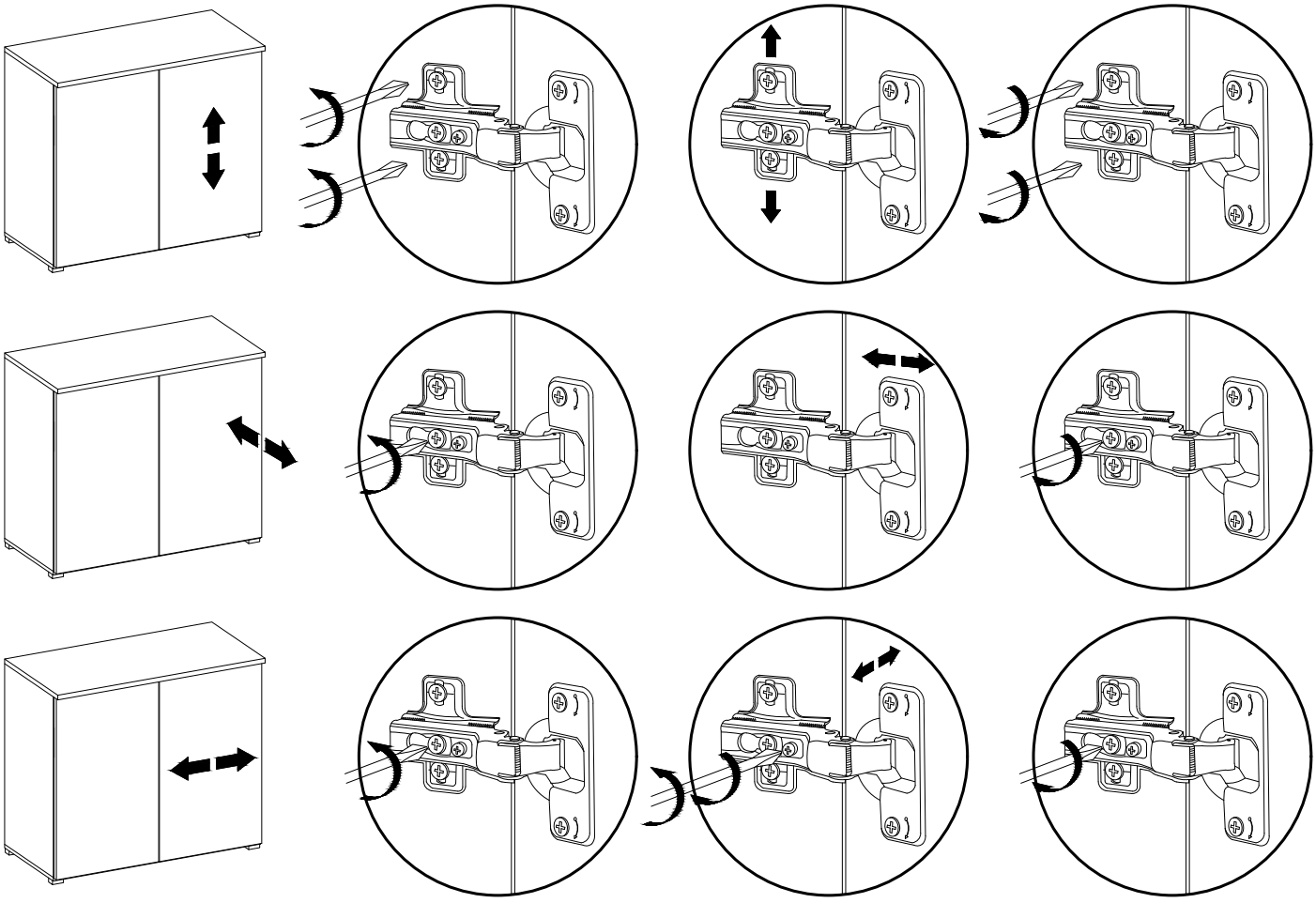

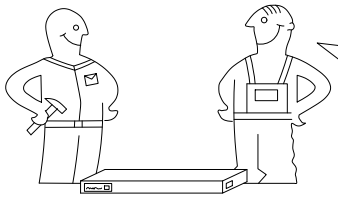

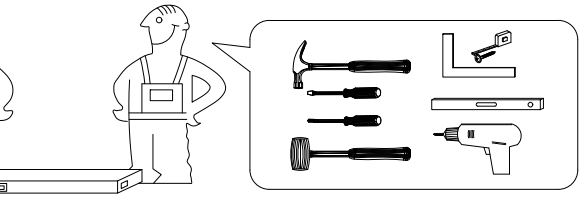

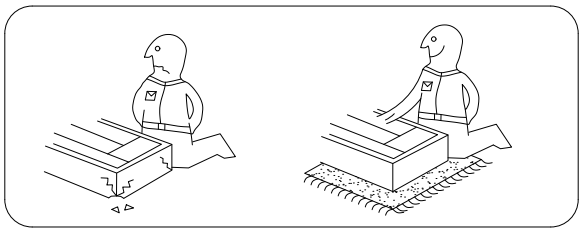

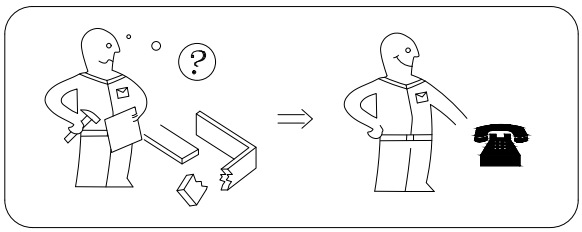

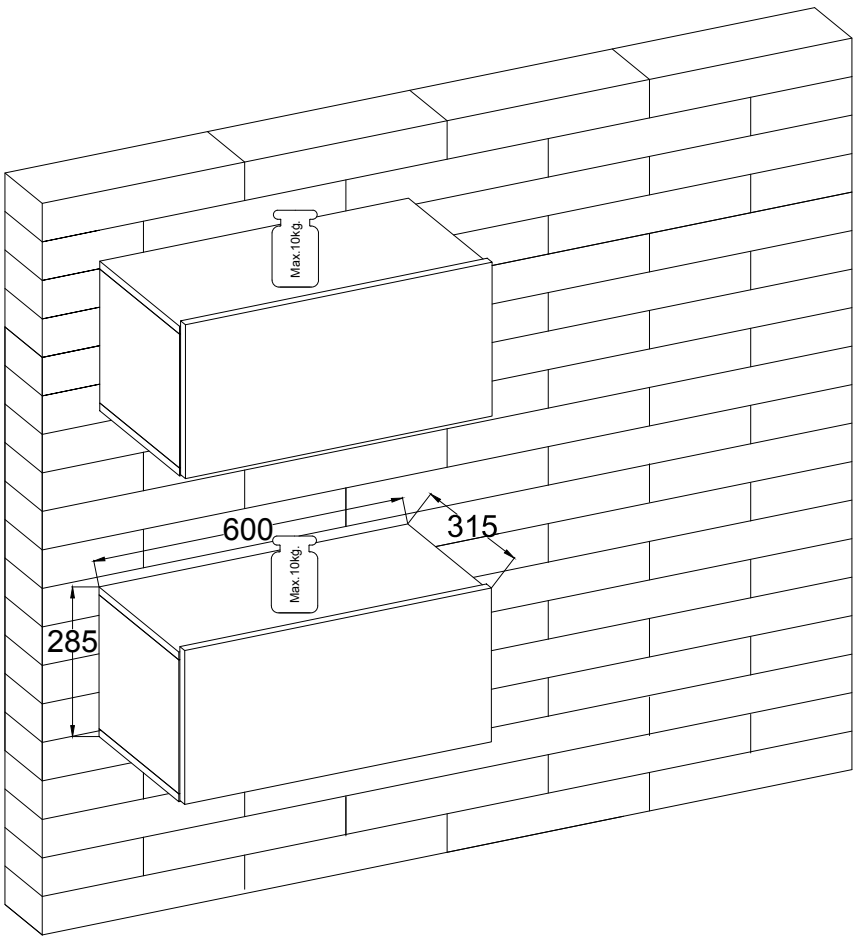
Max.10kg.
600
315
Max.10kg.
285

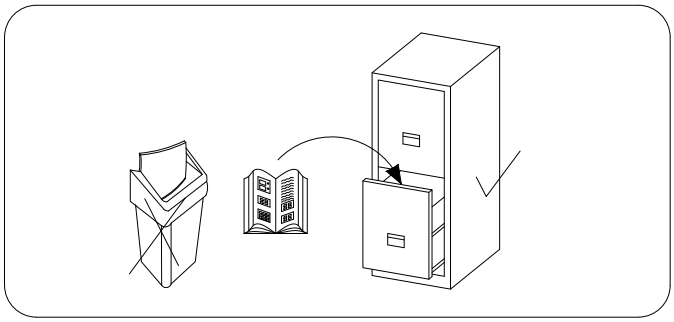

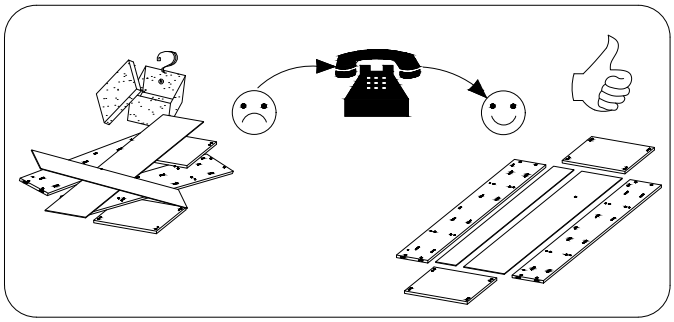

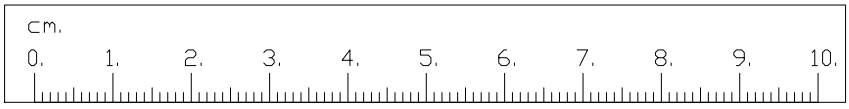
cm.
0.
1.
2.
3.
4.
5.
6.
7.
8.
9.
10.

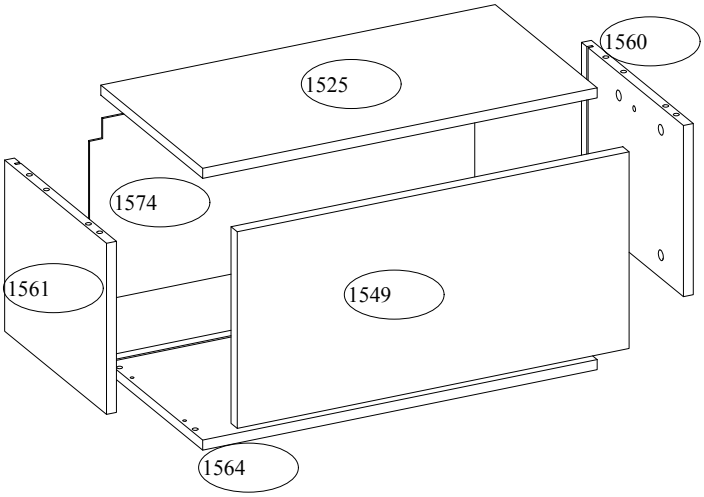
1560
1525
1574
1561
1549
1564

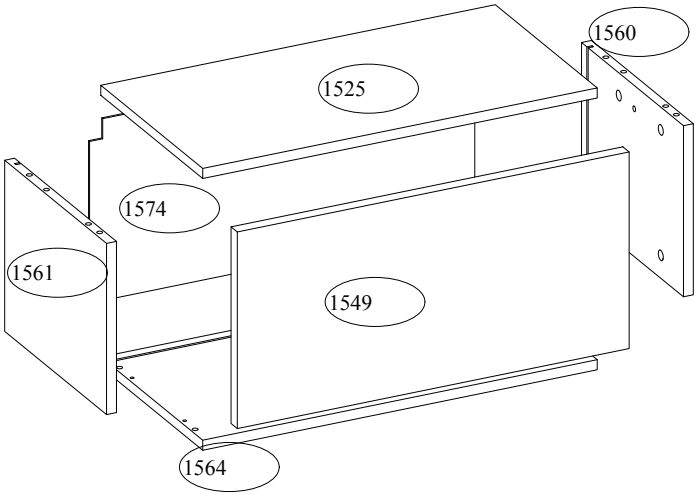
1560
1525
1574
1561
1549
1564

I – II

G	4.0x30 H1	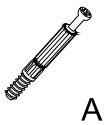 A	3.0x13 H	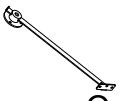 Q	8.0x30 D	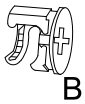 B	L
4	8	16	12	4	16	16	4

III – VI

6.3X13 F	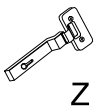 Z	X
8	4	16

VII – IX

I	3.0x13 H	Ø-10.0 KR
8	12	4

I

3.0x13 H	Q	G	4.0x30 H1	8.0x30 D	B
12	4	4	8	16	16

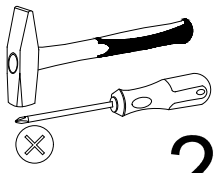

2x

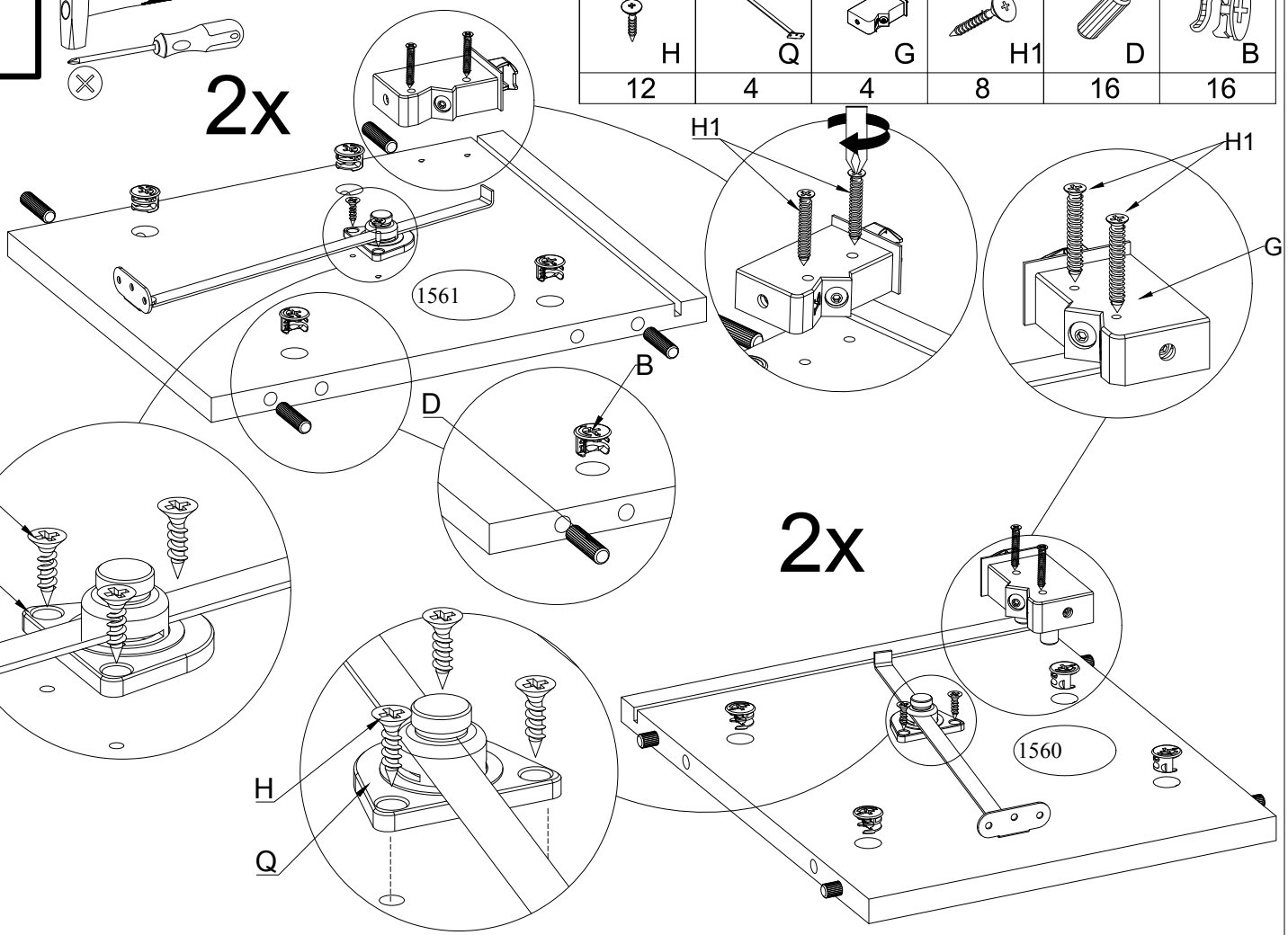

II

L	A
4	16

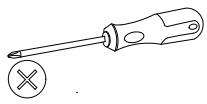

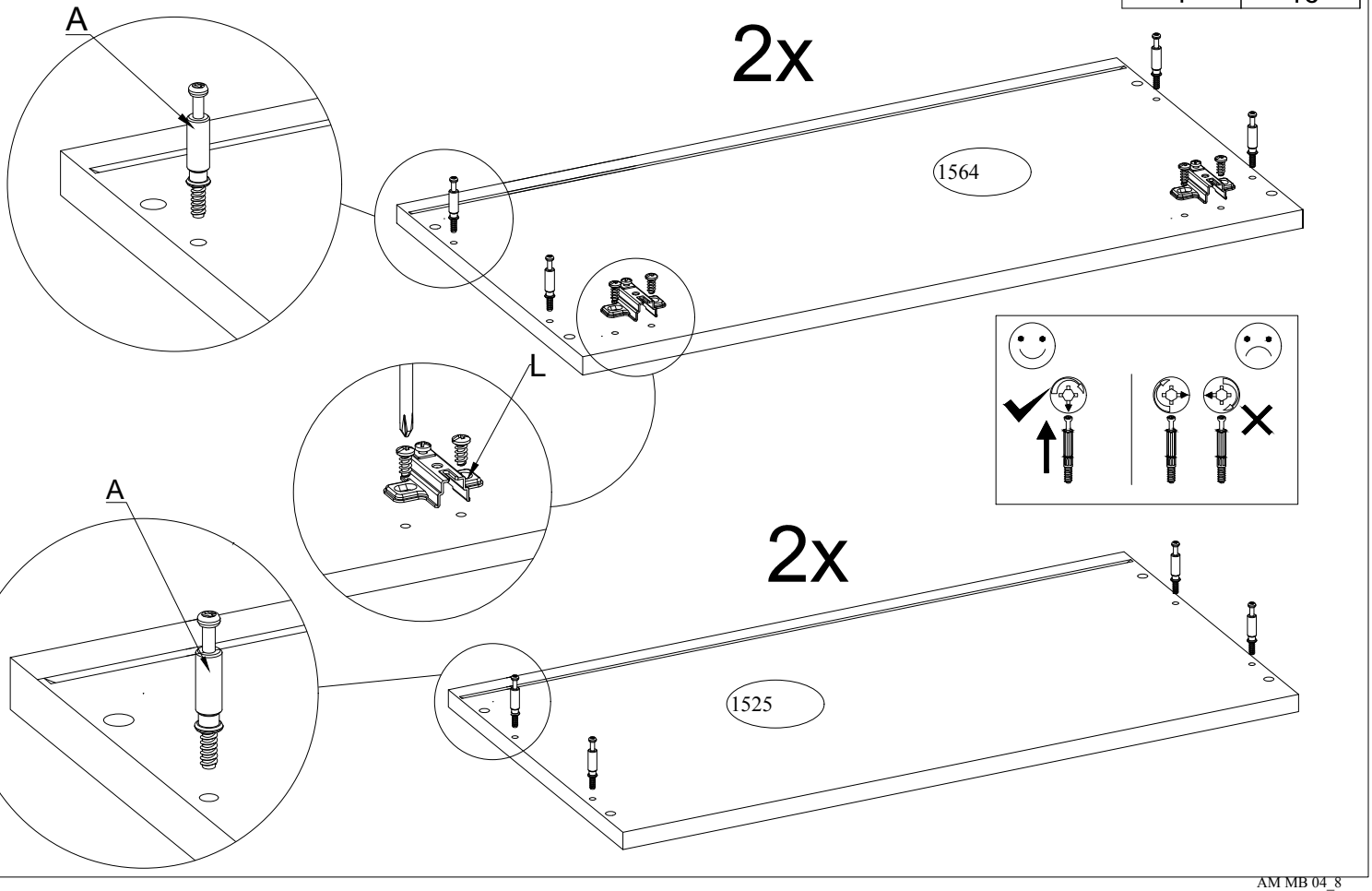

III

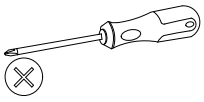

6.3X13 F	Z
8	4

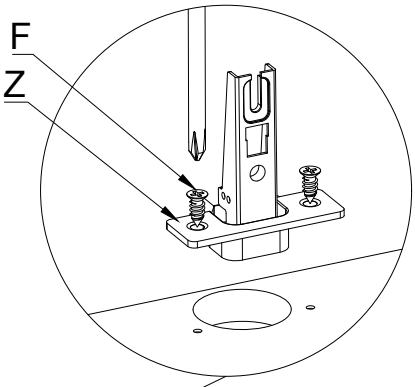

2x

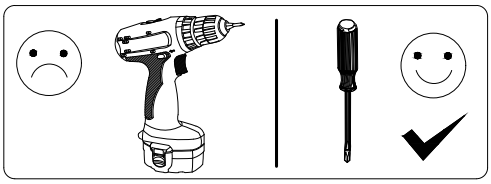

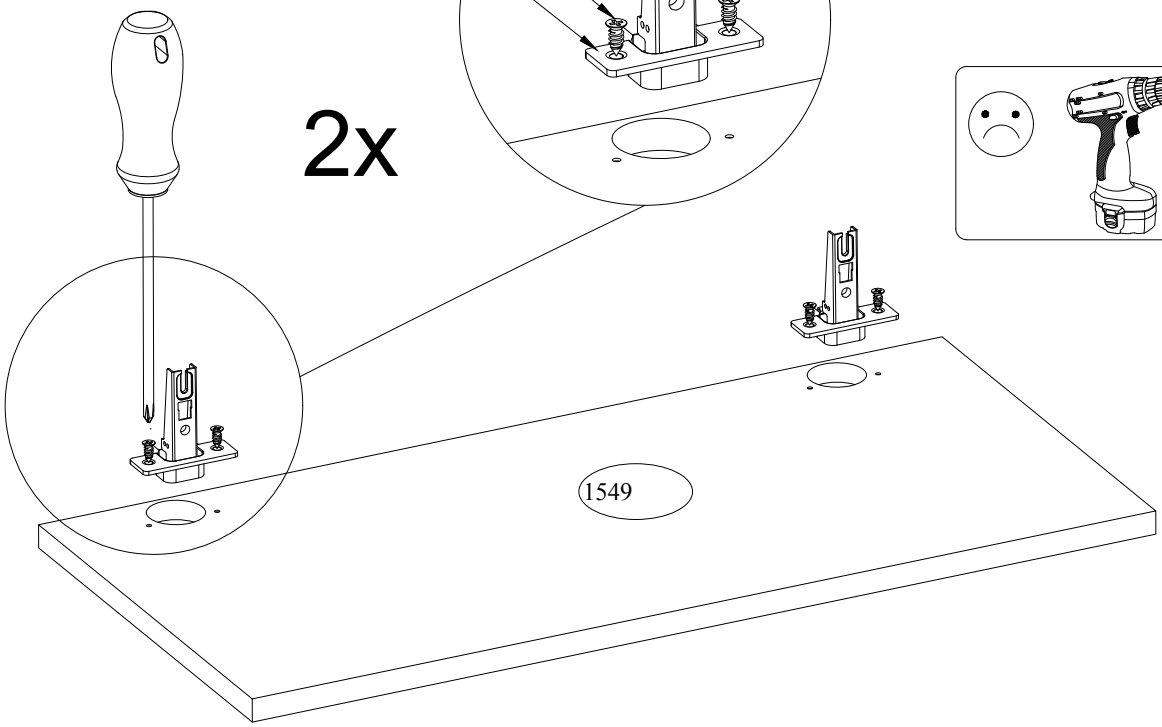

IV

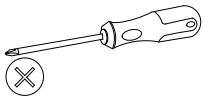

2x

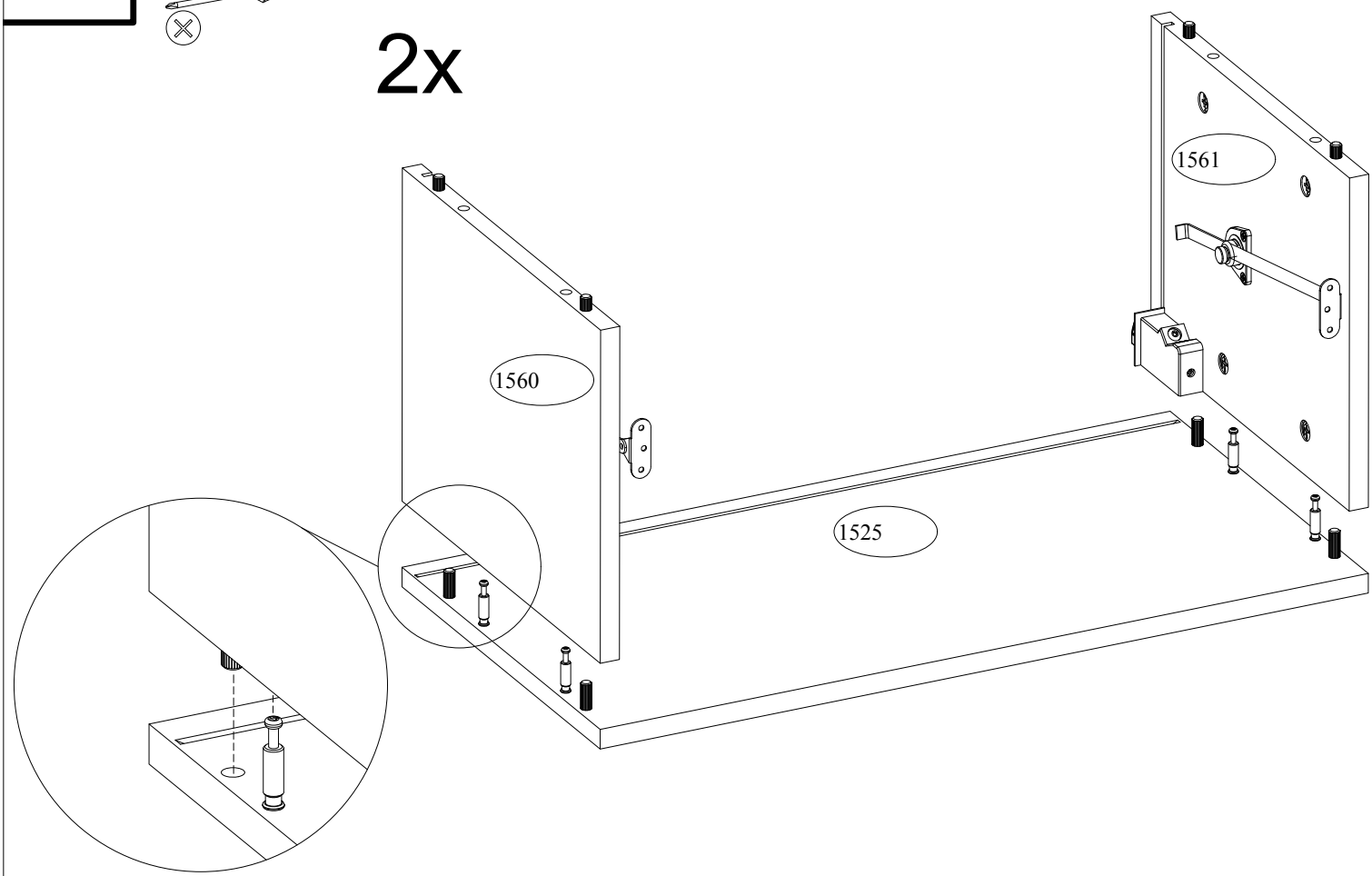

V

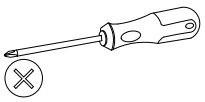

2x

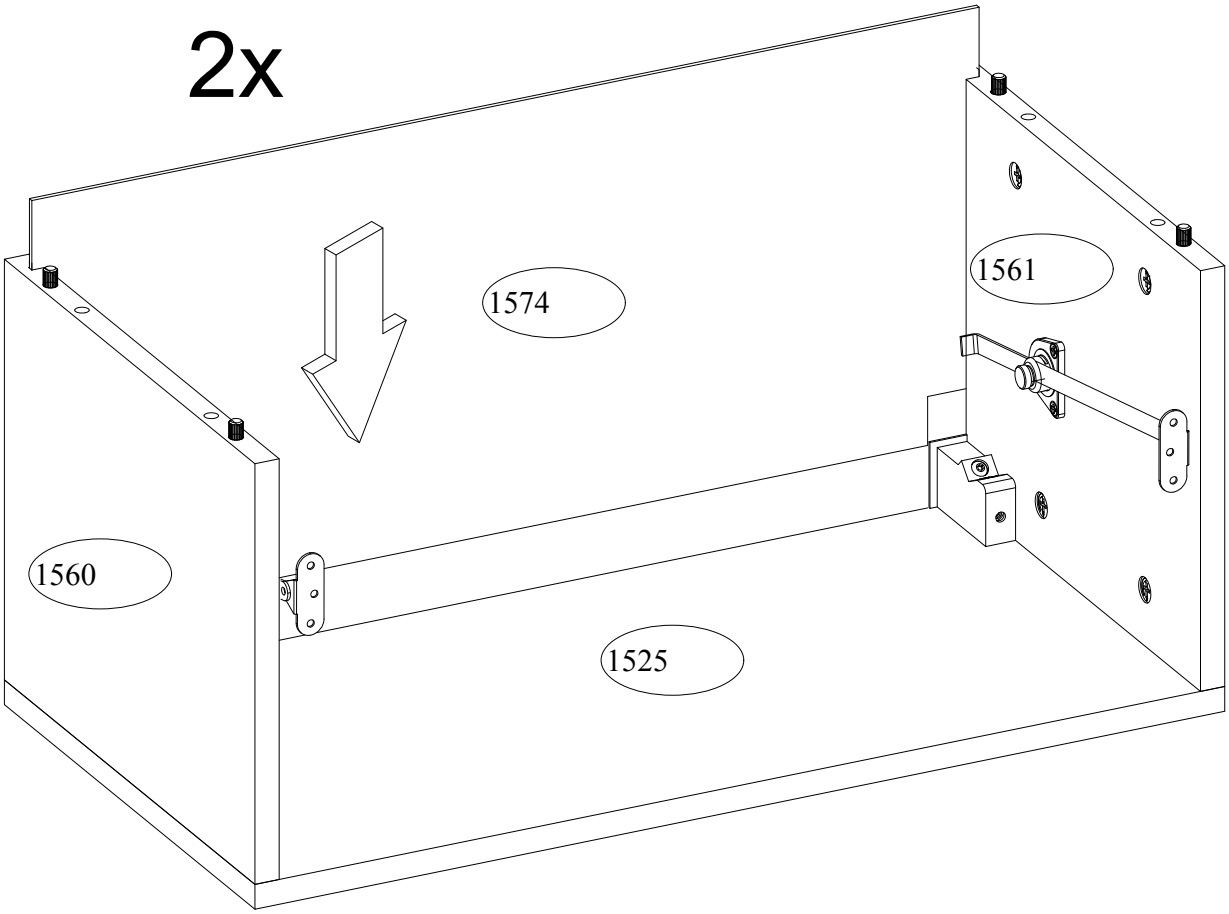

VI

2x

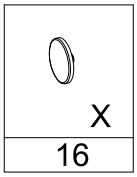

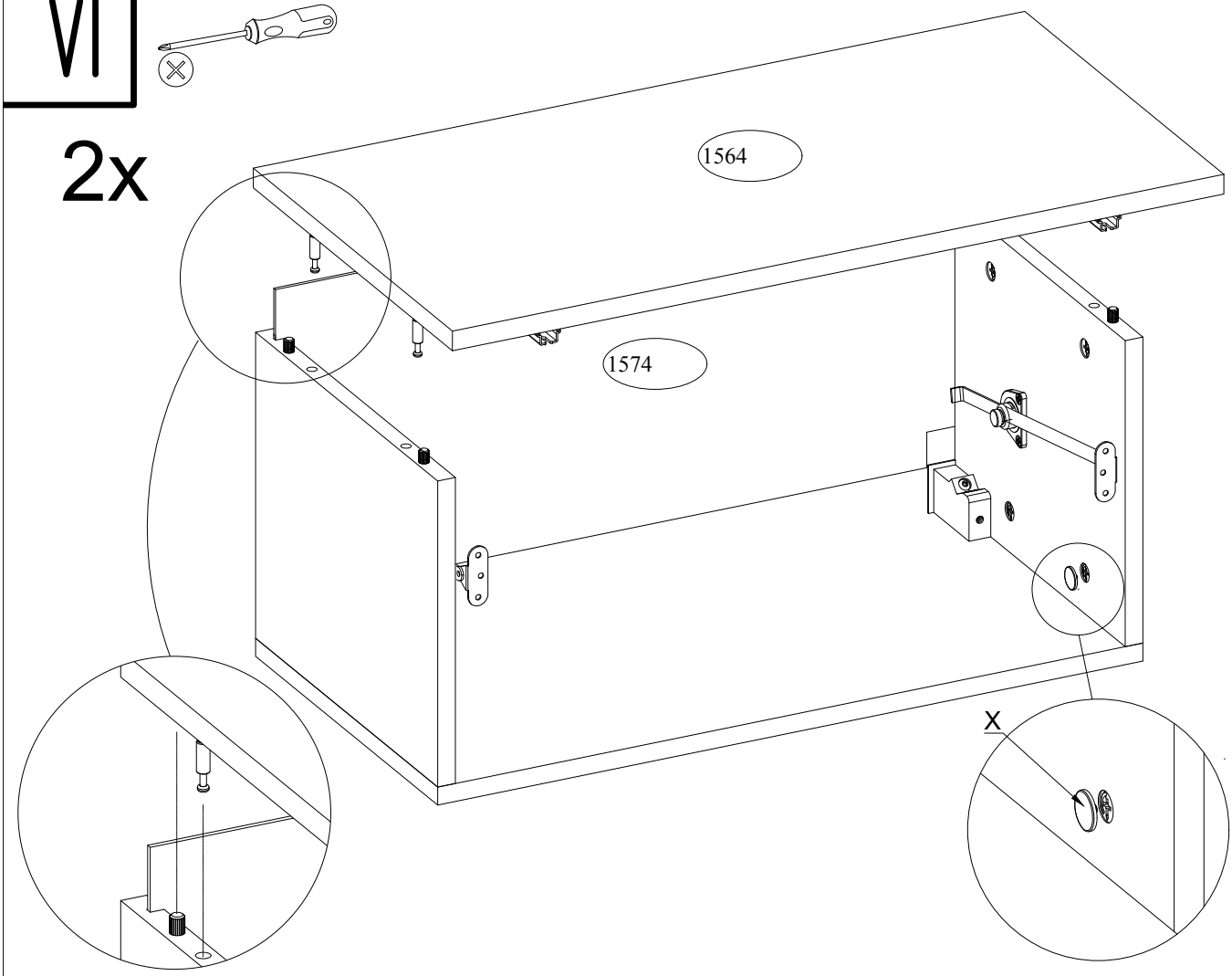

VII

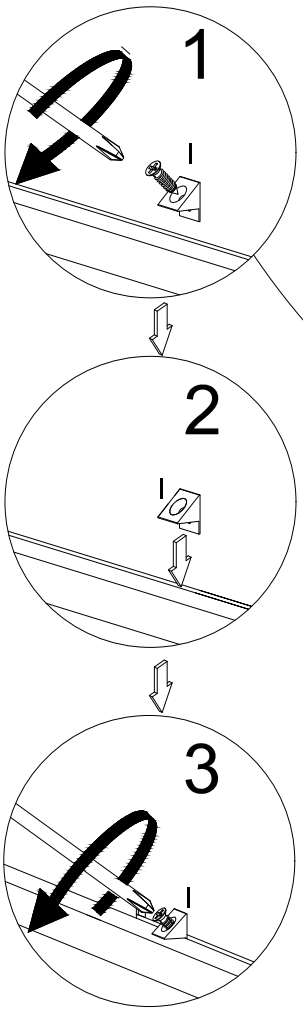

2x

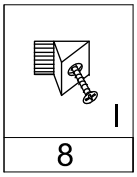

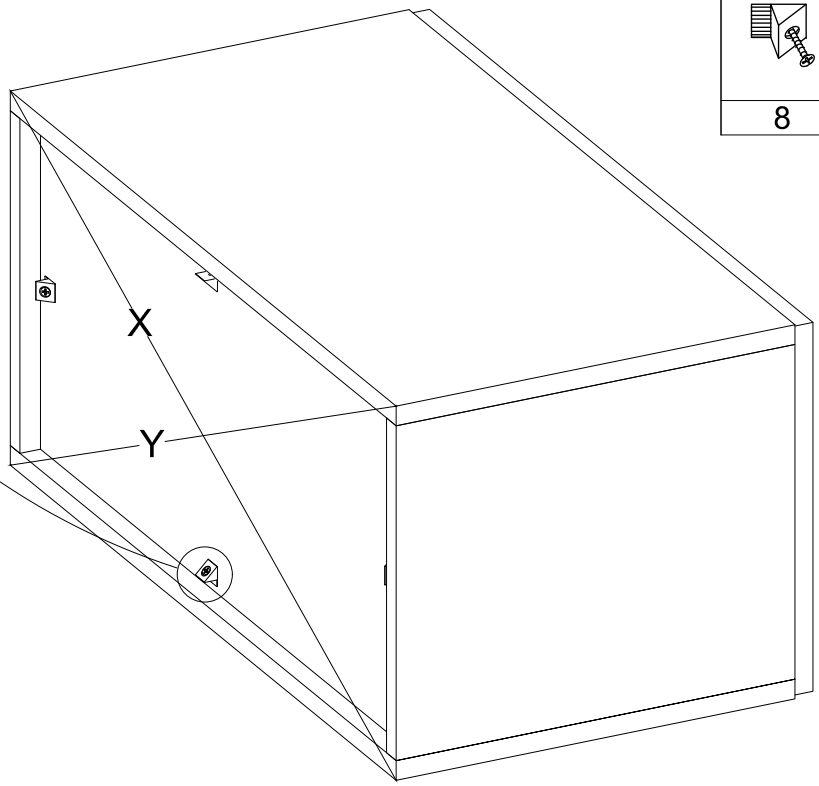

X=Y

VIII

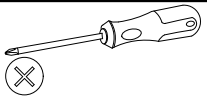

2x

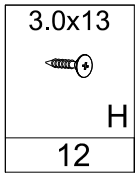

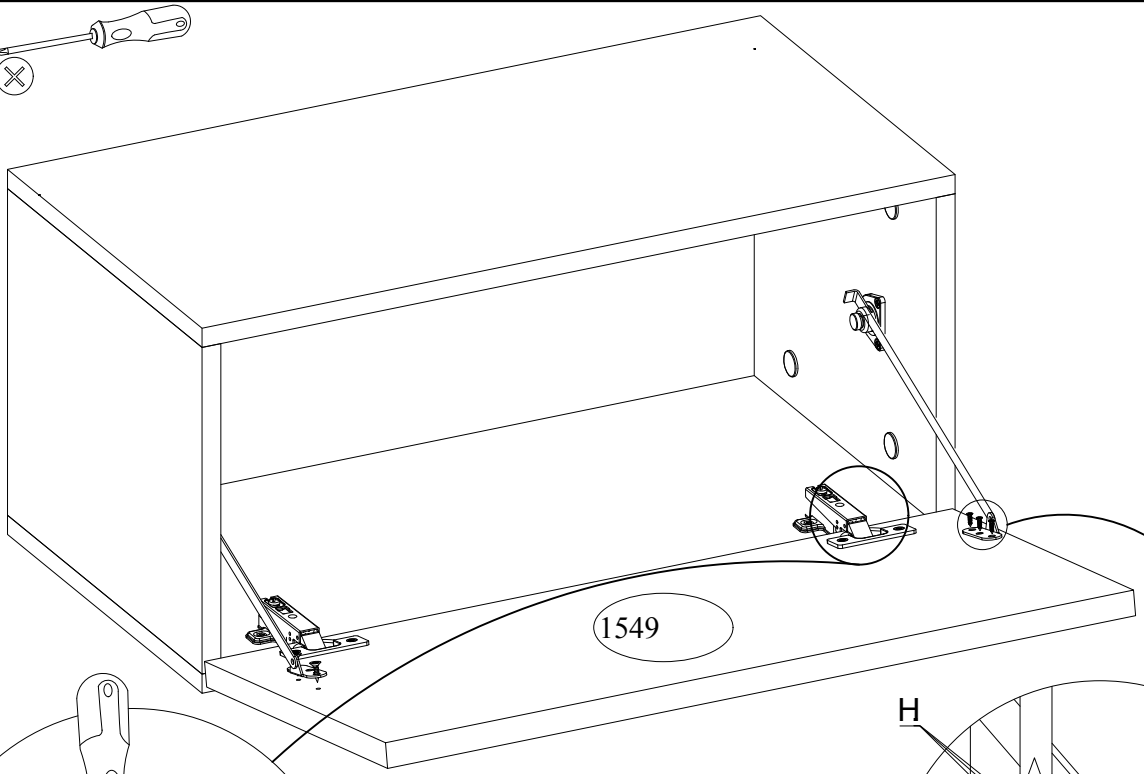

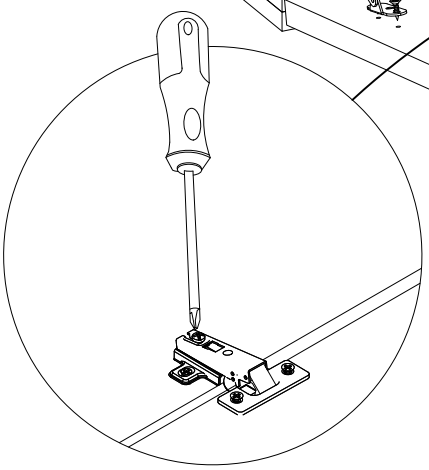

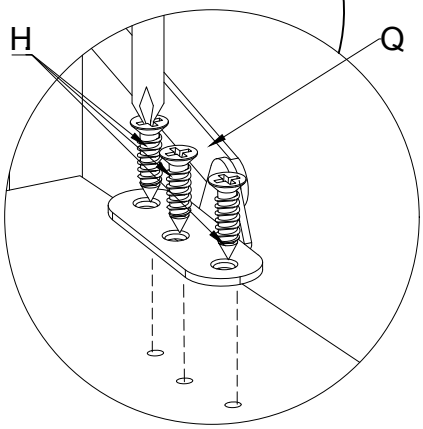

IX

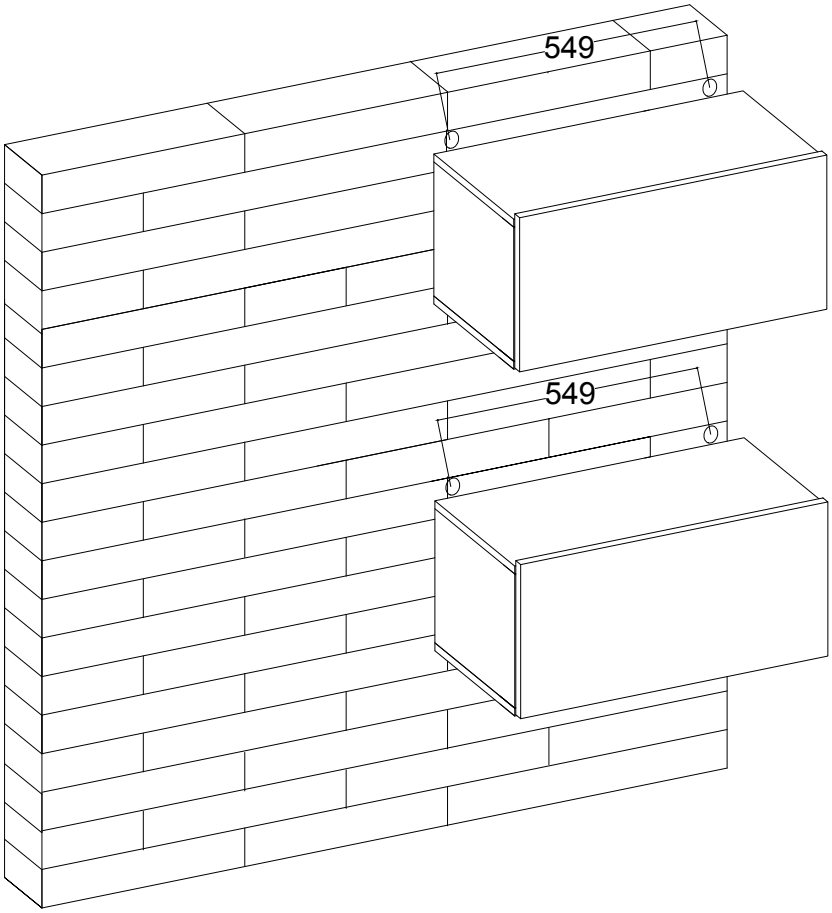

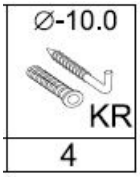

X

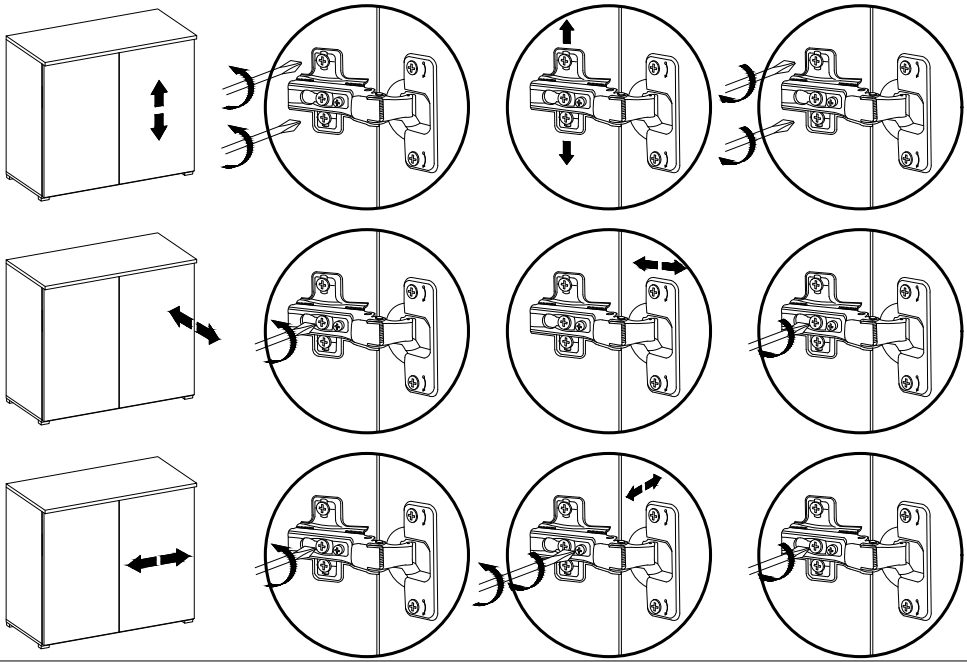

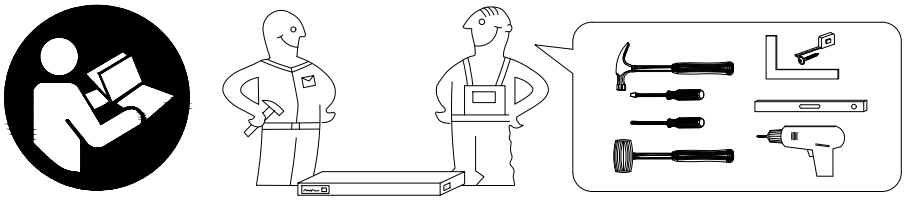

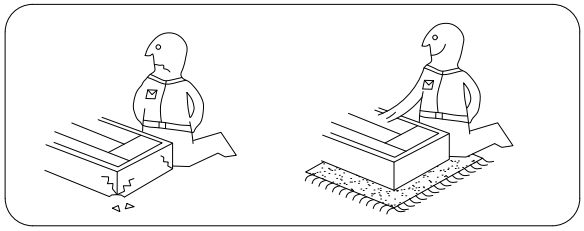

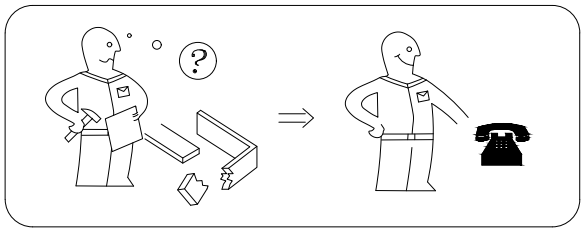
?

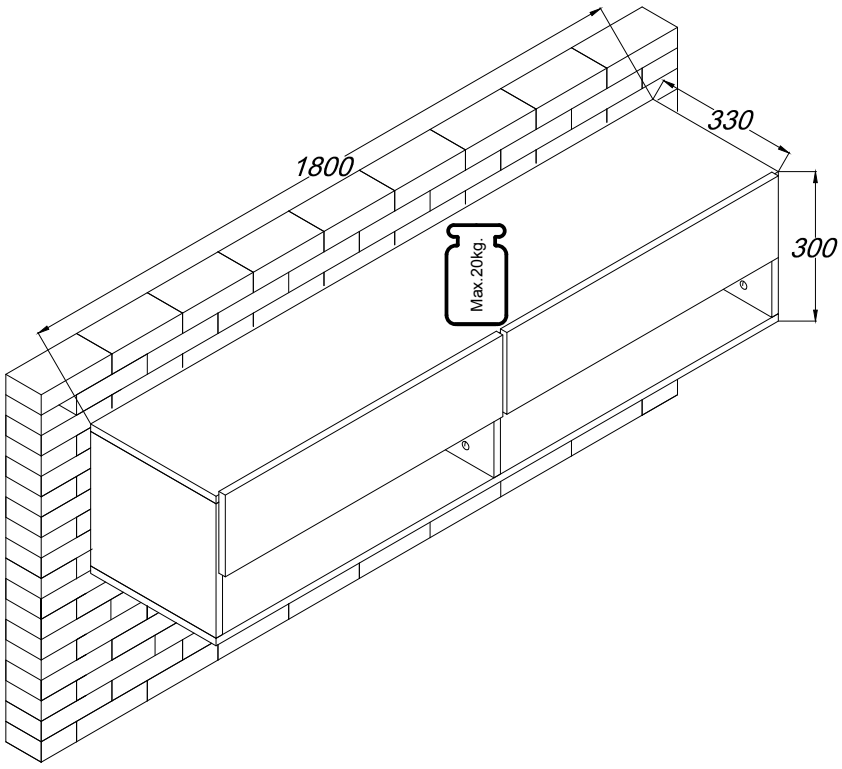
1800
330
300
Max.20kg.

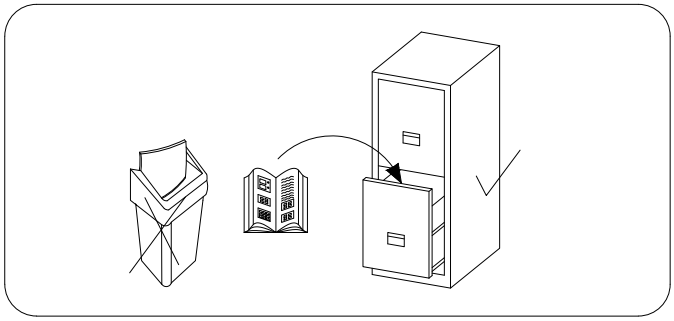

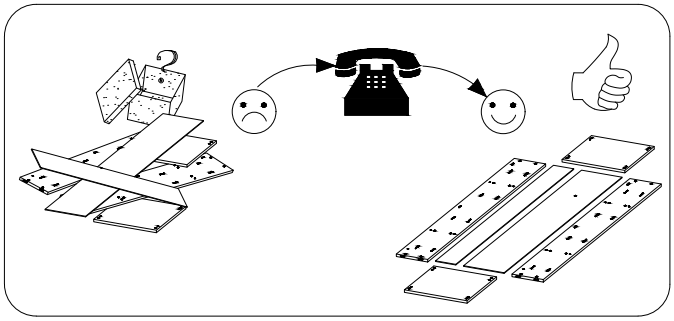

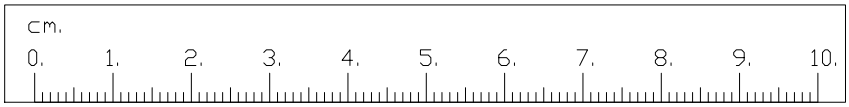
cm.
0.
1.
2.
3.
4.
5.
6.
7.
8.
9.
10.

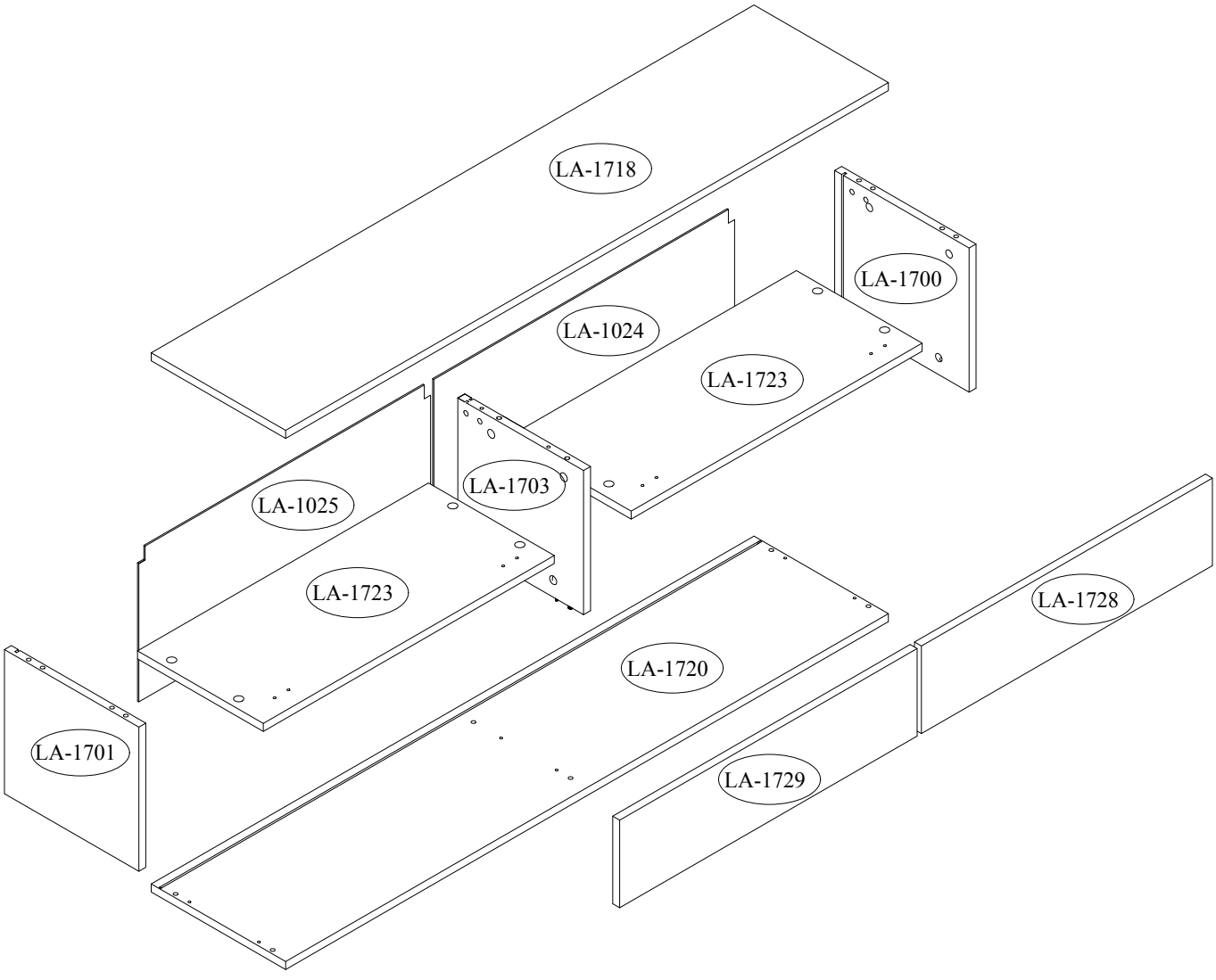
LA-1718
LA-1700
LA-1024
LA-1723
LA-1703
LA-1025
LA-1723
LA-1728
LA-1720
LA-1701
LA-1729

I

A
12

II

L	8.0x30 D	B
4	8	8

III

G	4.0x30 H1	8.0x30 D	B	Q	3.0x13 H	A
2	4	8	8	2	6	4

IV

G	4.0x30 H1	8.0x30 D	B
1	2	4	4

V-VIII-IX-X-XI

A1	6.3X13 F	Z	X	3.0x13 H	I	∅-10.0 KR
2	8	4	20	6	12	1

I

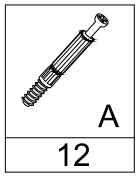
A
12

1x

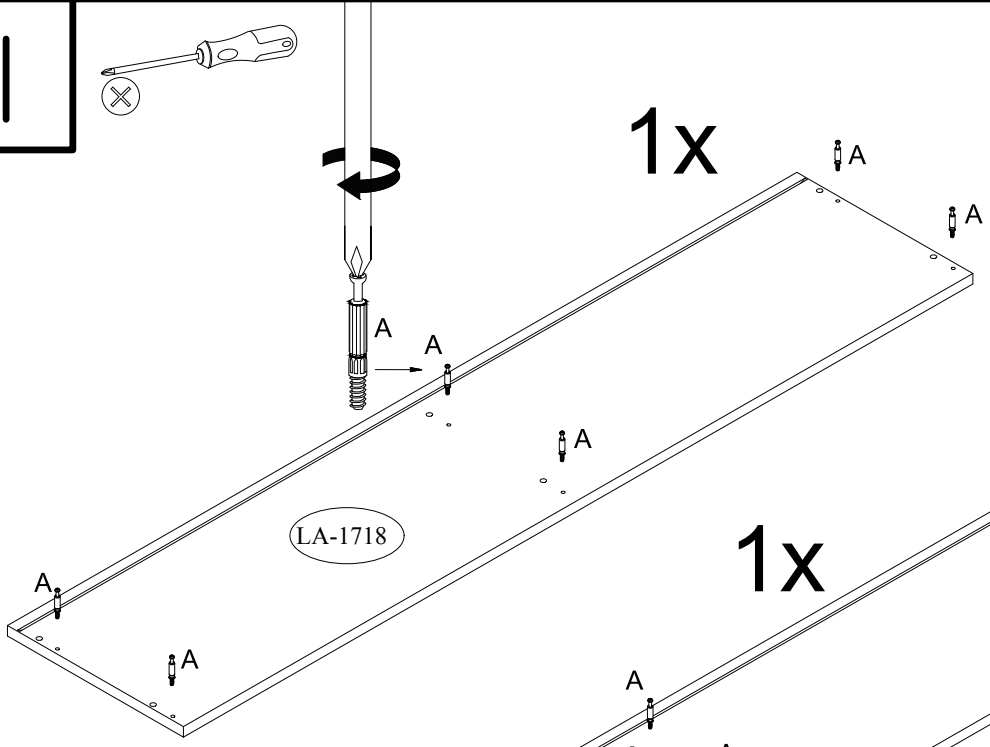
A
A
A
A
A
A
LA-1718

1x

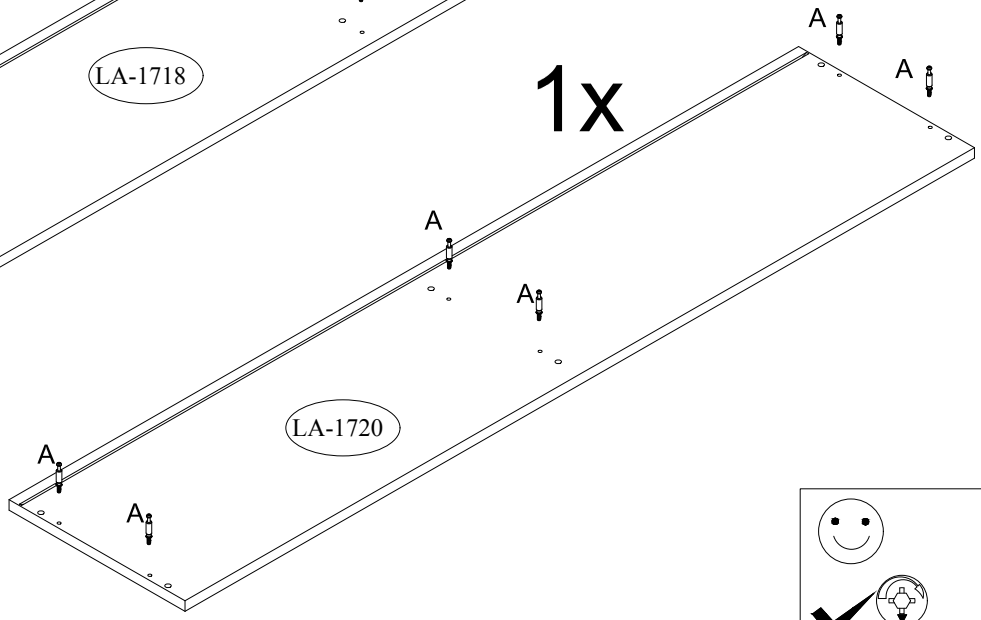
A
A
A
A
A
A
LA-1720

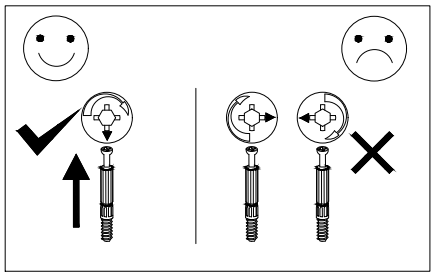

II

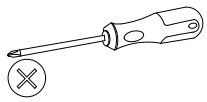

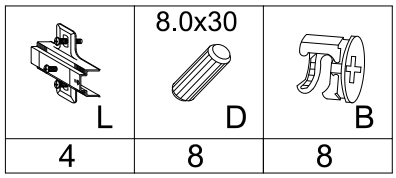
L
8.0x30
D
B
4
8
8

2x

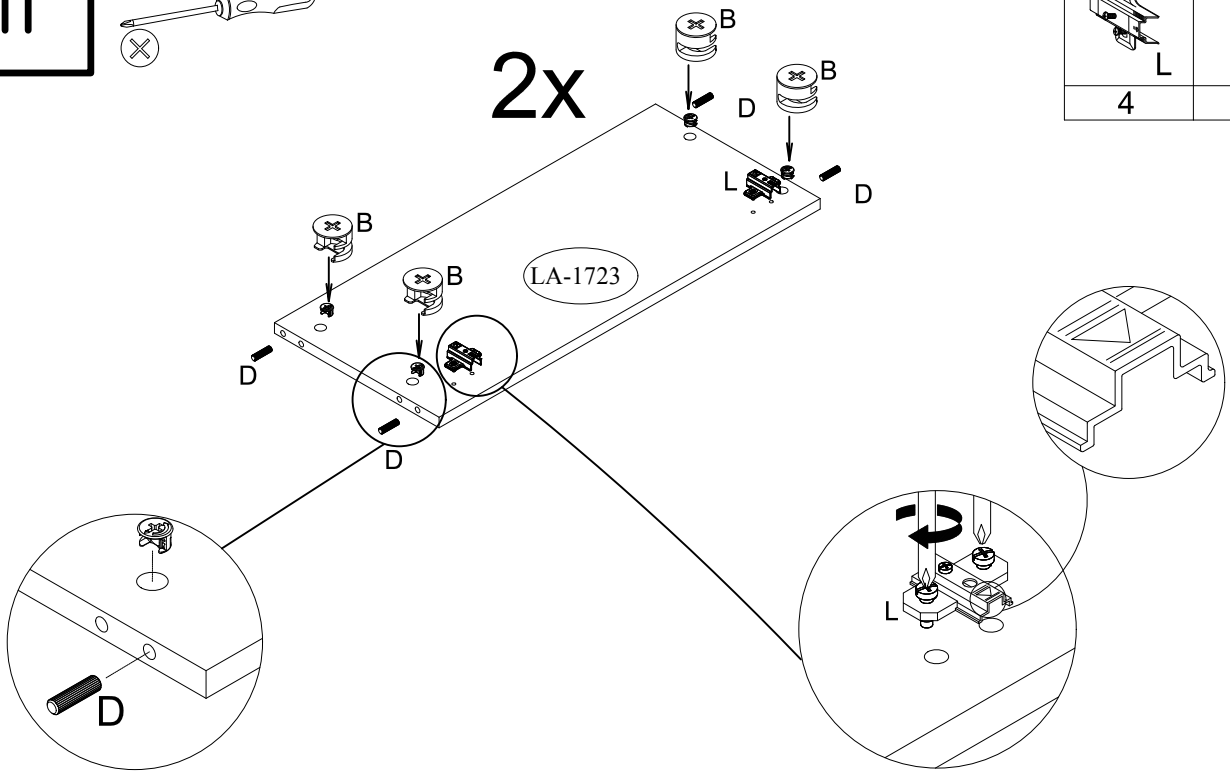
B
B
D
L
D
B
B
LA-1723
D
D
D
L

III

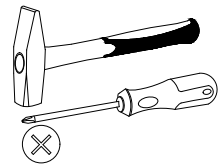

A	3.0x13 H	G	4.0x30 H1	8.0x30 D	B
4	6	2	4	8	8

Q
2

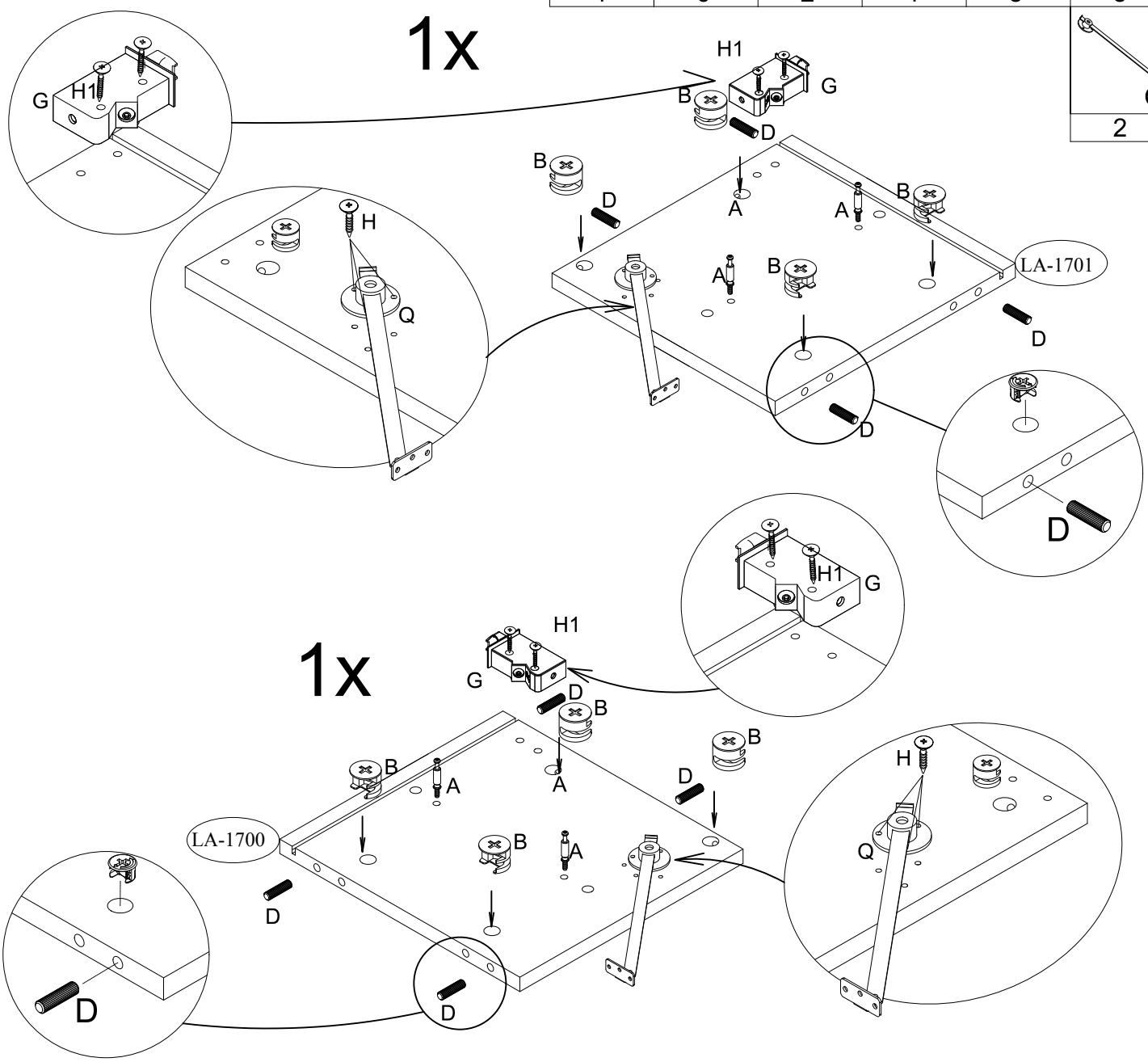

IV

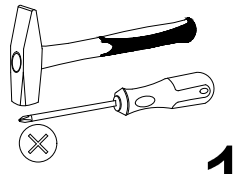

G	4.0x30 H1	8.0x30 D	B
1	2	4	4

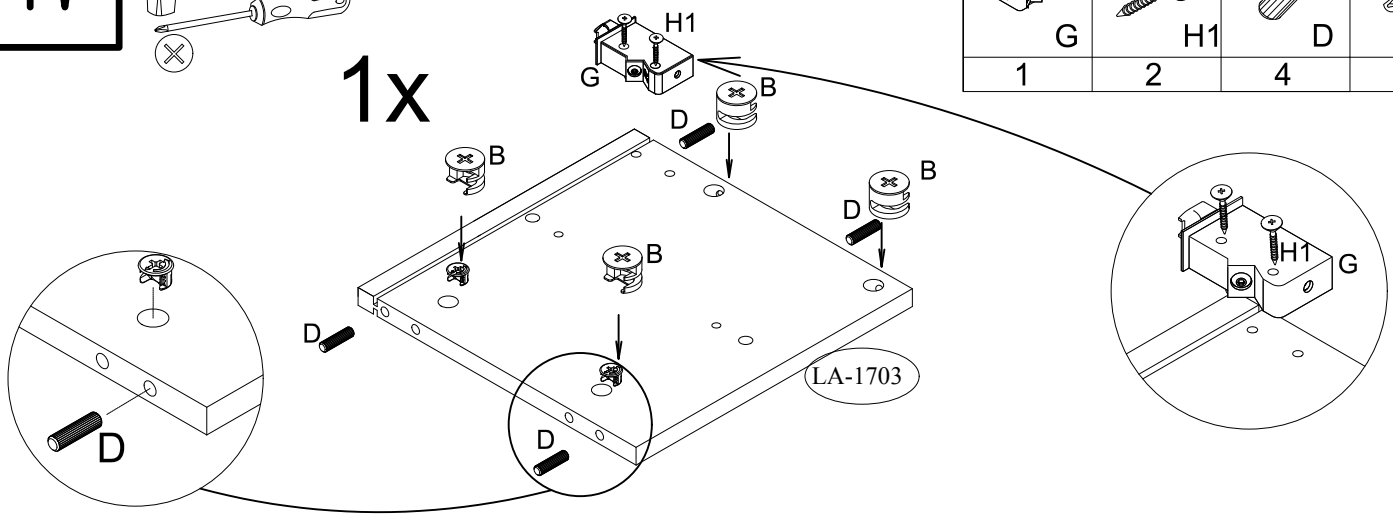

V

A1	6.3X13 F	Z
2	8	4

1x

Z

F

F

LA-1728

1x

LA-1729

LA-1700

A1

LA-1723

LA-1703

LA-1723

LA-1701

A1

A1

A2

A1=A2

90°

90°

VI

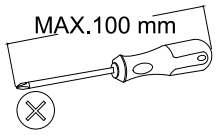
MAX.100 mm

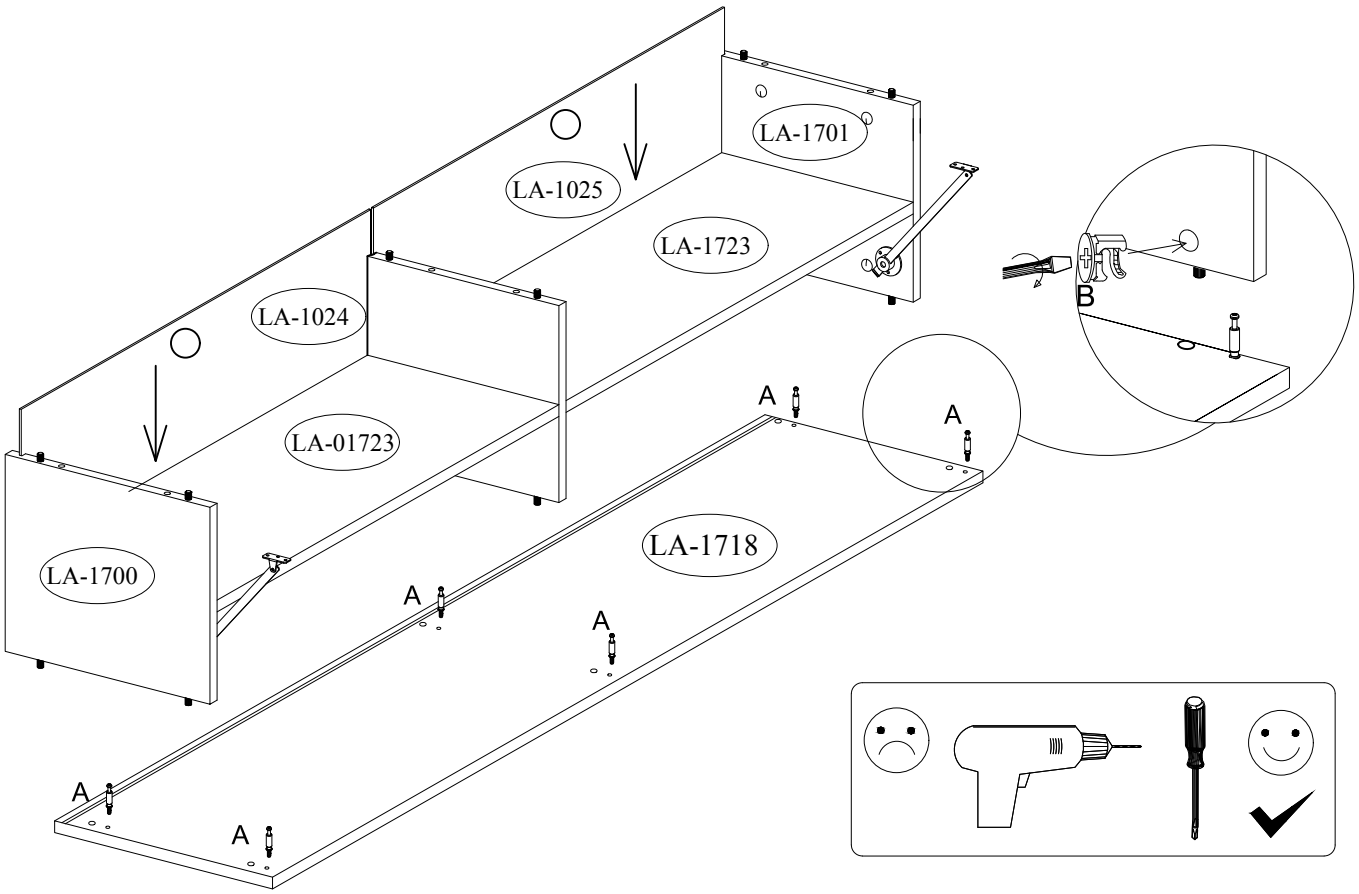
LA-1701
LA-1025
LA-1723
LA-1024
LA-01723
LA-1700
LA-1718
A
A
A
A
A
B

VII

MAX.100 mm

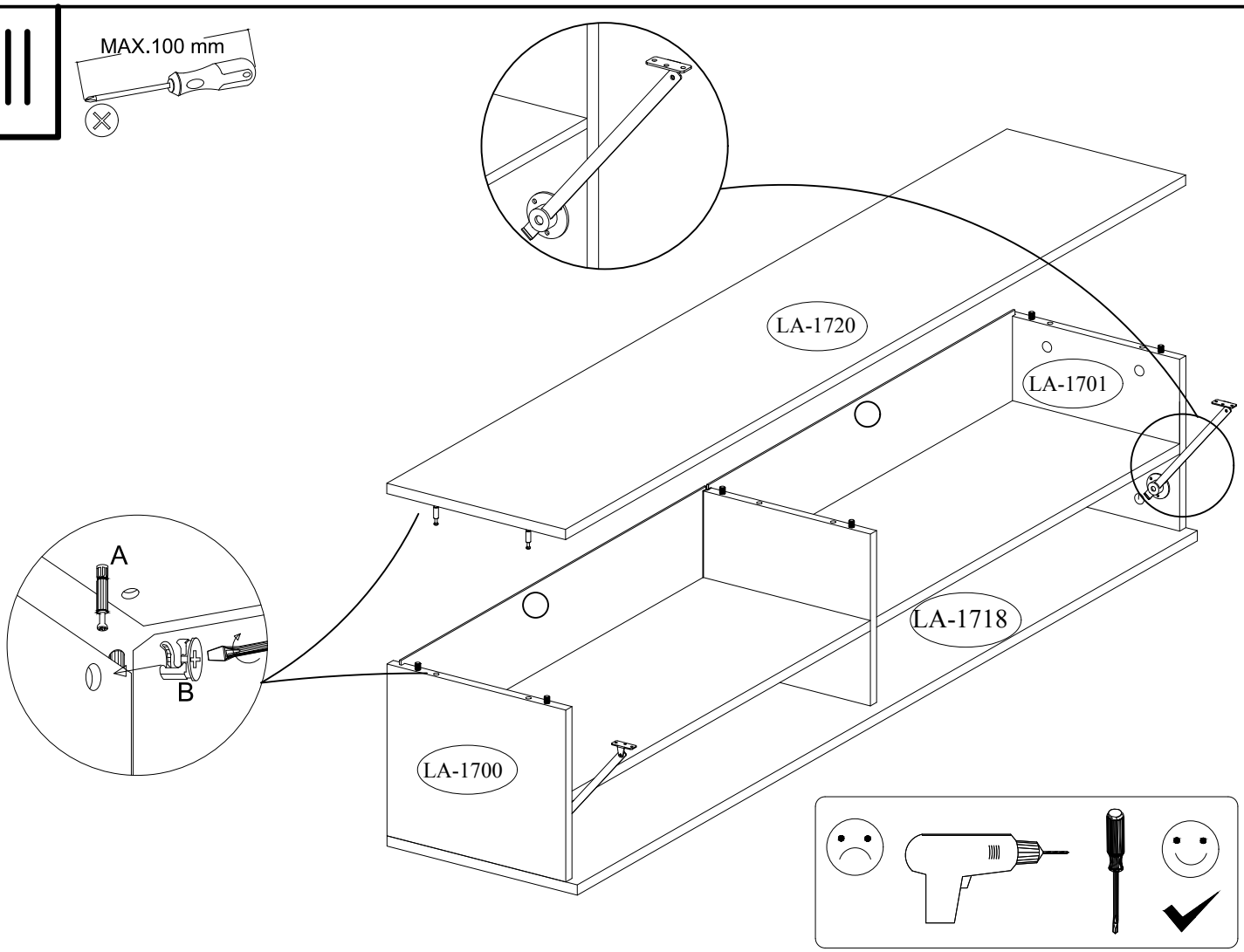
LA-1720
LA-1701
LA-1718
LA-1700
A
B

VIII

MAX.100 mm

3.0x13
H
6

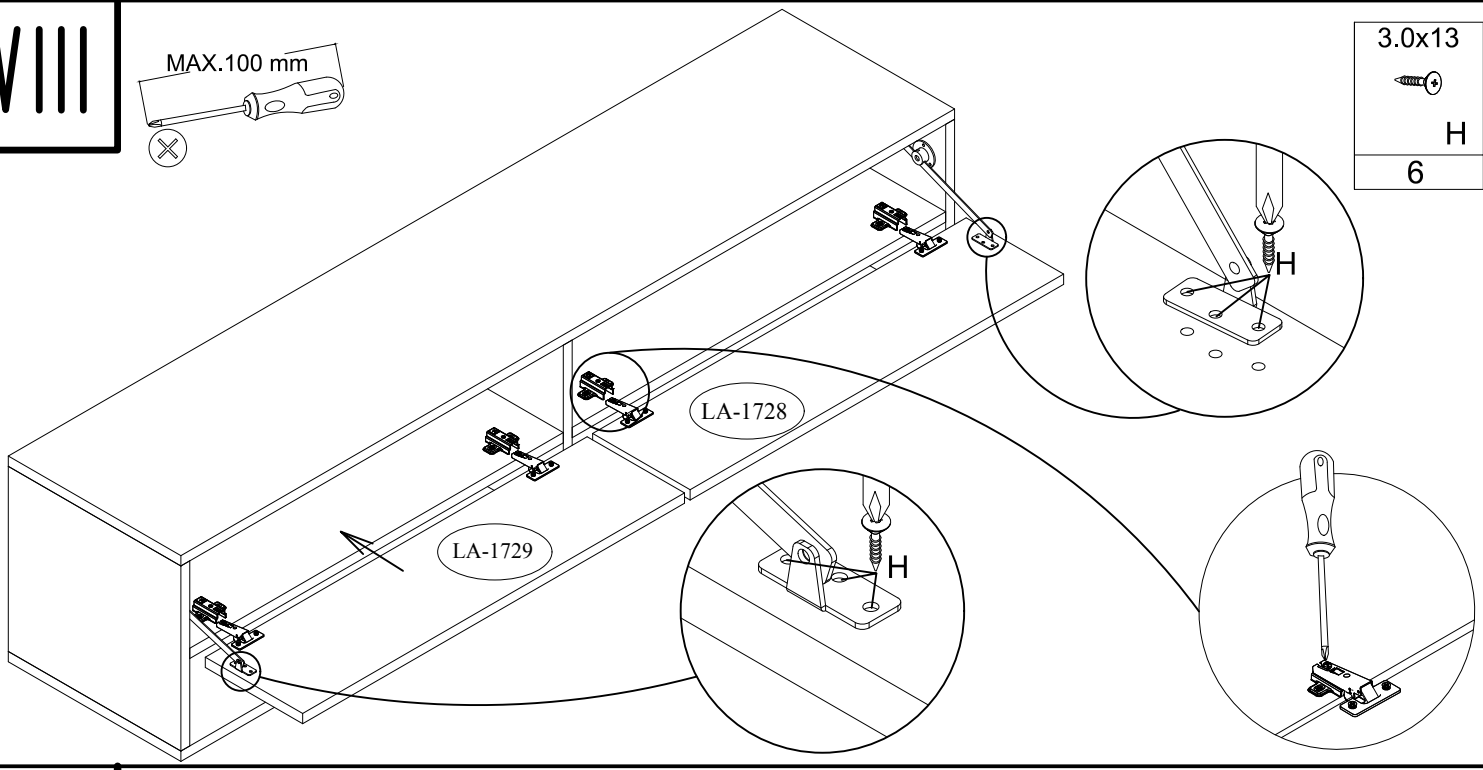
LA-1728
LA-1729
H
H

IX

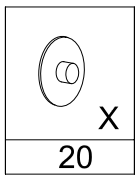
X
20

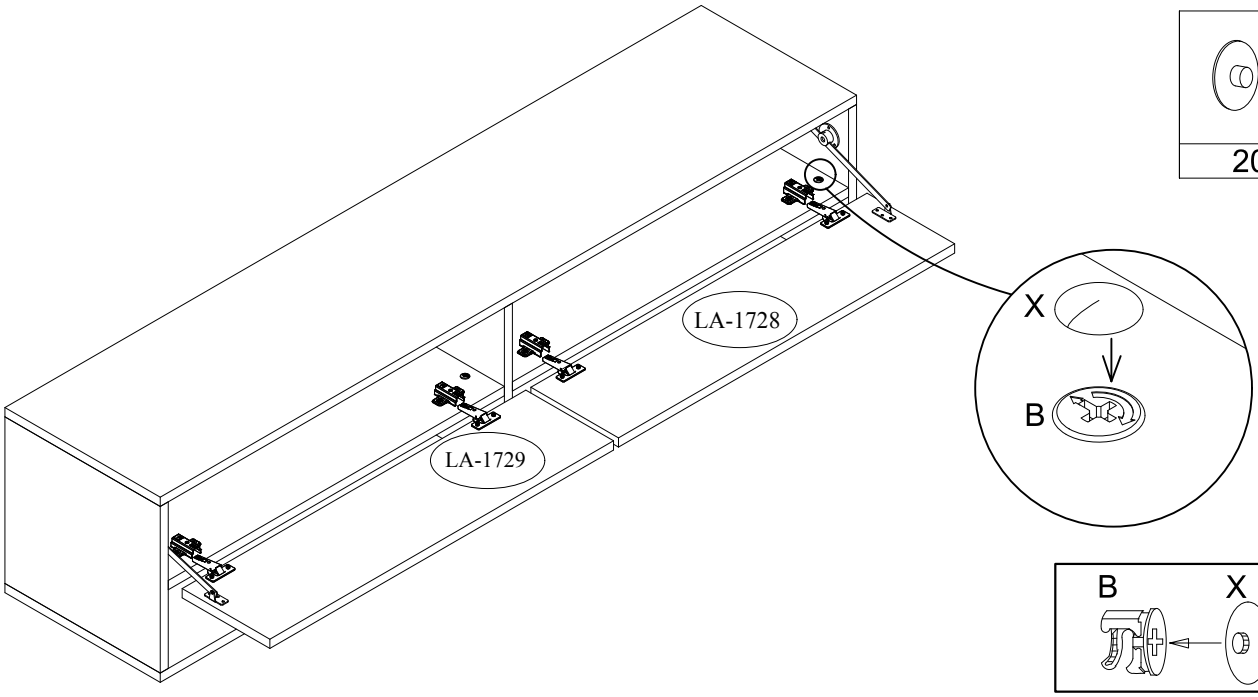
LA-1728
LA-1729
X
B

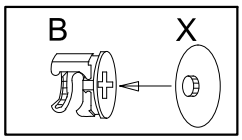
B
X

X

I
12

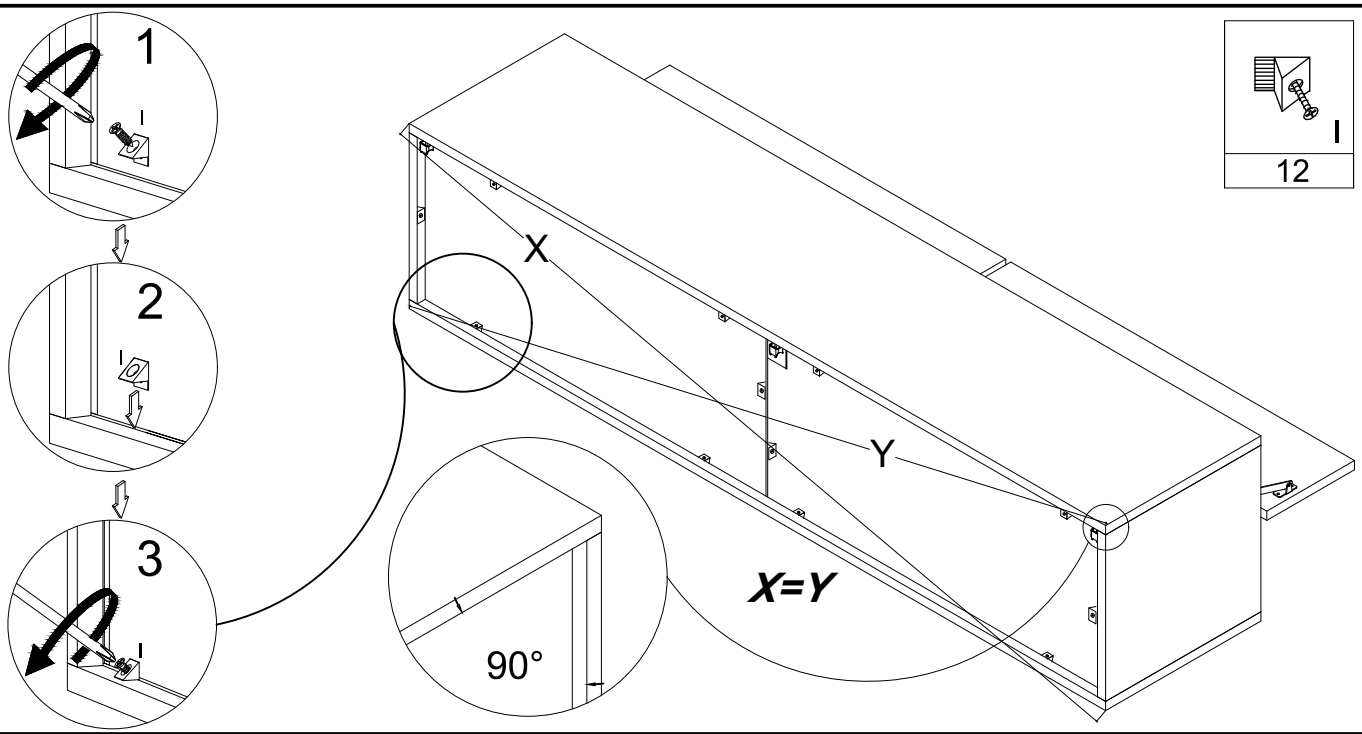
1
2
3
I
X
Y
X=Y
90°

XI

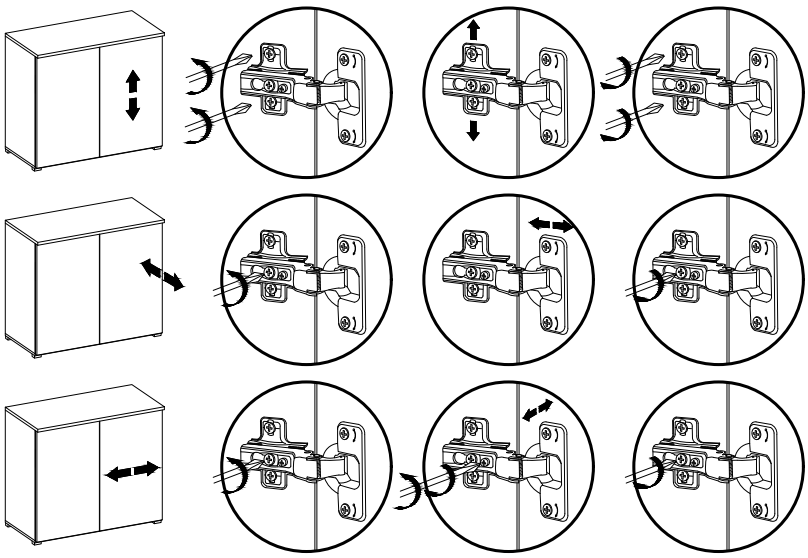

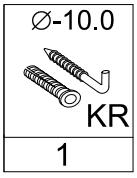

1

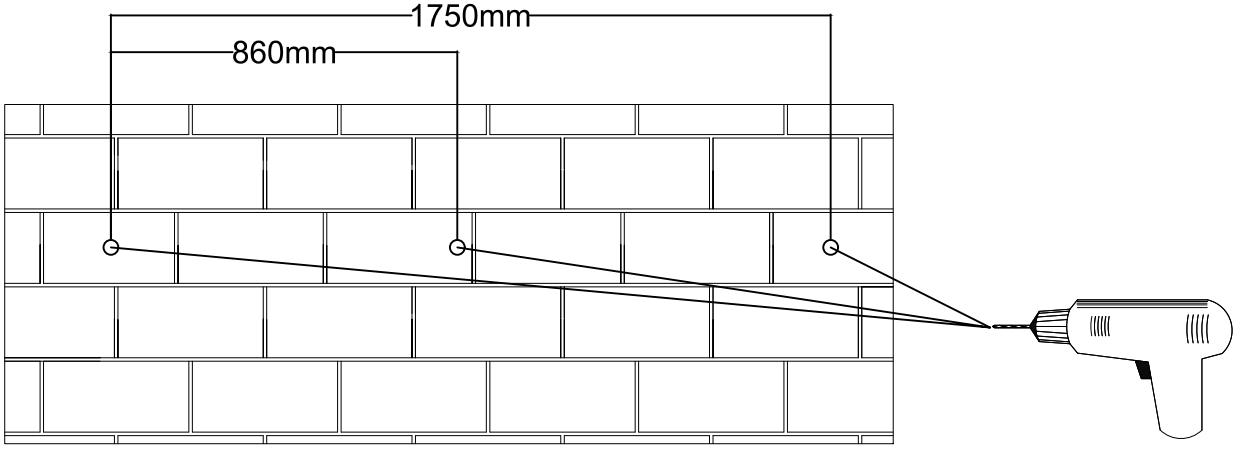

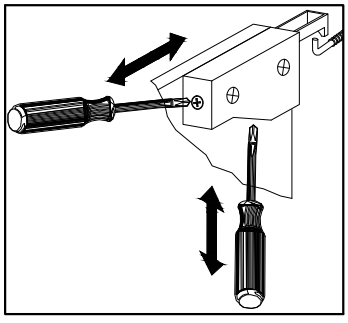

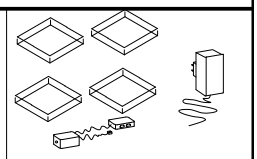
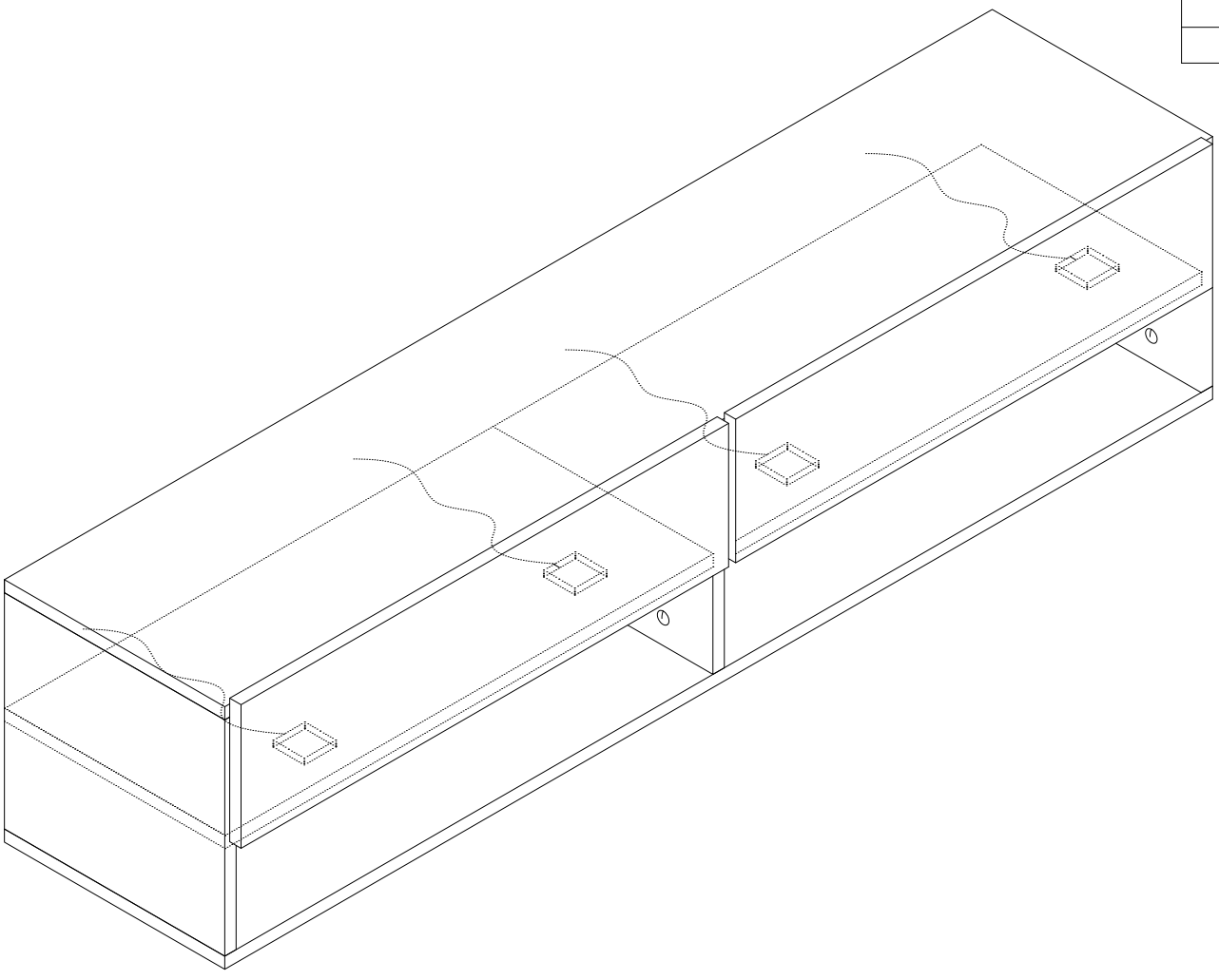
1